Polymers **2011**, *3*, 1-5

OPEN ACCESS

polymers

ISSN 2073-4360
www.mdpi.com/journal/polymers

Supplementary Materials

Spectroscopic Investigation of Composite Polymeric and Monocrystalline Systems with Ionic Conductivity

Darya V. Radziuk * and Helmuth Möhwald

Max-Planck Institute of Colloids and Interfaces, Am Mühlenberg 1, D14424 Potsdam, Germany; E-Mail: helmuth.moehwald@mpikg.mpg.de

* Author to whom correspondence should be addressed; E-Mail: darya.radziuk@mpikg.mpg.de; Tel.: +49-0-331-567-9447; Fax: +49-0-331-567-9202.

Figure SI.1. The fragment of the structural formula of polyethylene oxide $[–CH_2–CH_2–O–]_n$ with n = 2.

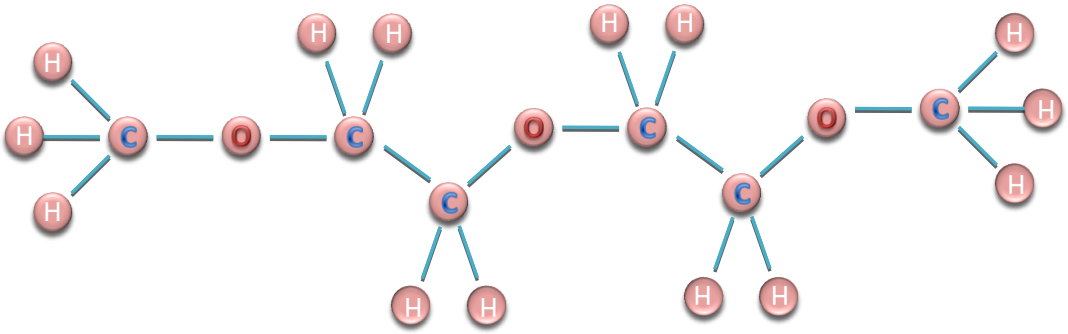

Table 2. Raman spectra of $(EG)_nDME$ (n = 2 and 11) at room temperature.

$(EG)_nDME$		**Assignment**
n = 2	**n = 11**	
306_m	271_m	$_\delta$(COC), $_\delta$S, $_\tau$S [16]
530_w	536_w	$_\delta$(COC), $_\delta$S [16], $_r(CH_2)$
803_m	813_m	$_r(CH_2)$
854_m	844_m	$_r(CH_2)$
925_w	925_w	$_r(CH_2)_s$, $_\delta$(COC)
972_w	972_w	$_r(CH_2)_s$
994_w	995_w	$_\nu$(CO), $_\nu$S [16]
1029_s	1032_s	$_\nu$(CO), $_\nu$S [16]
1133_m	1136_m	$_\nu$(COC), $_\nu$S [16], $_\nu$(CO)
1252_m	1252_m	$_t(CH_2)$
1286_m	1288_m	$_t(CH_2)_s$
	1342_{sh}	$_w(CH_2)$, $_\nu$S [16]
	1400_w	$_w(CH_2)$, $_\nu$ [16]
1448_{sh}	1455_{sh}	$_\delta(CH_2)$
1475_s	1474_s	$_\delta(CH_2)$
-	-	$_\nu$(C=O)
-	-	$_\nu$(CN)
-	-	$_\nu(CH_3)$
2948_{vs}	2947_{vs}	$_\nu(CH_2)$

The characteristics of the bands intensity are given in arbitrary units as '*vw*' (very weak, $<10^3$), '*w*' (weak, 1–2 × 10^3), '*m*' (medium, 4–8 × 10^3), '*s*' (strong, 8–10 × 10^3) and '*vs*' (very strong, >10 × 10^3).

Figure SI.2. The temperature add-on device R495 from Bruker with 1—nipple for tapping; 2—nipple-section for faucet of vacuum device; 3—nipple for tapping supply; 4—thermocouple outlet; 5—contacts of windows electro-heater; 6—measuring thermocouple capping; 7—protective window; 8—cuvette for liquids; 9—tempering jacket; 10—water-proof housing; 11—elastic element; 12—reserve container; 13—contacts of electro-heater.

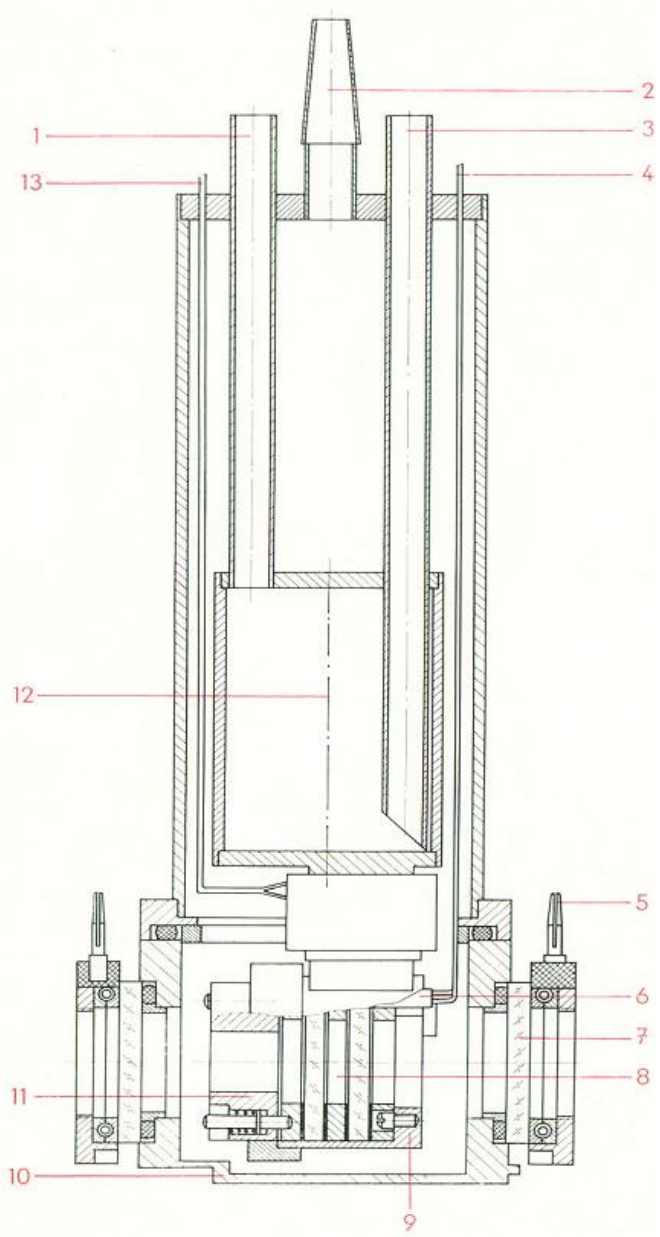

Figure SI.3. Home made temperature device inside the spectrometer with 1—cables for connection to power supply; 2—thermocouple; 3—pellet-sample; 4—thermo-insulating housing; 5—metallic net; 6—cable for connection of thermocouple with voltmeter. The pellet-sample with iron-constantan thermocouple which is connected to the voltmeter is fixed to the home made temperature device by metallic holder. The temperature of the pellet-sample was controlled the voltage and current which were varied by the voltage and constant current source.

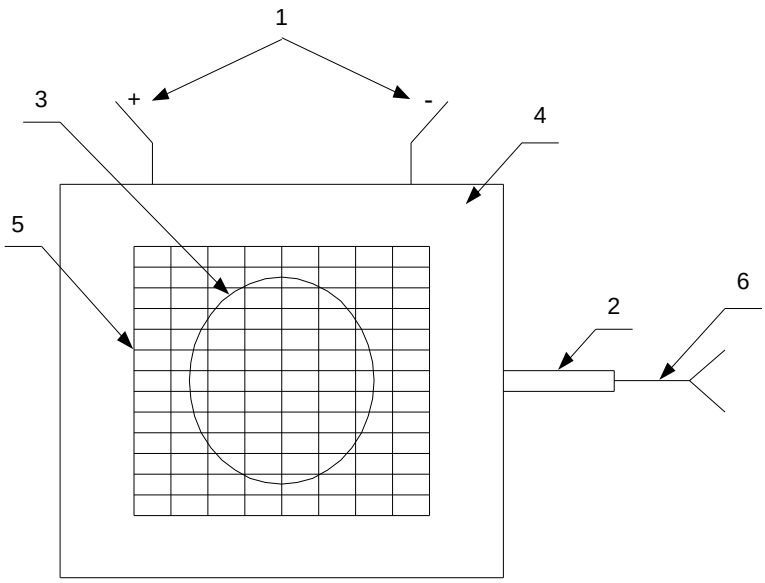

Figure SI.4. Calibration curves of the thermocouple (thermo EMF *versus* temperature) in the special home made thermostate and temperature add-on devices, respectively.

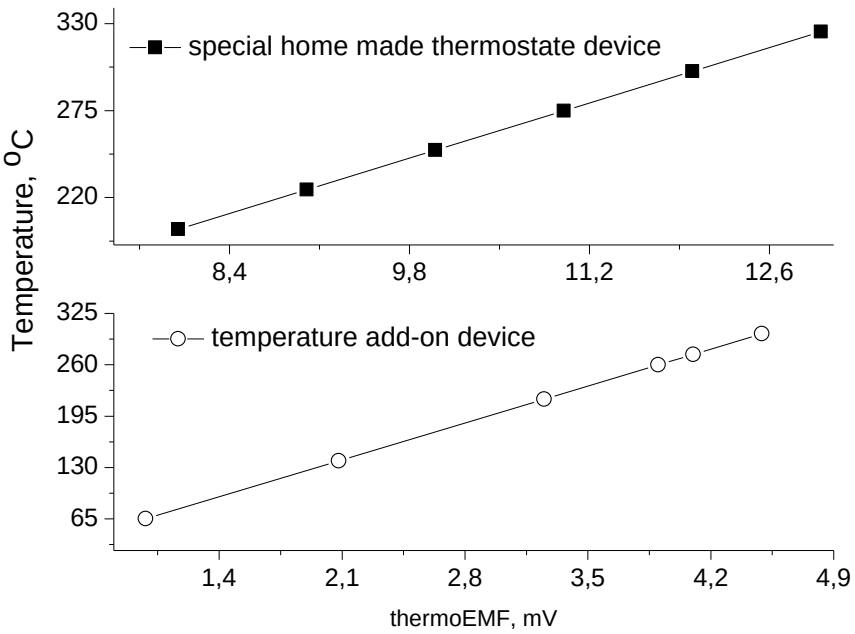

Figure SI.5. Raman spectrum of $LiCF_3SO_3$ in a polymeric matrix at room temperature with bands, which are ascribed to ${}_{\nu}C-S$, ${}_{\delta}SO_3$ ${}_{\delta}CF_3$, ${}_{\nu}SO_3$ and ${}_{\nu}C=O$ from 200 to 2,000 cm^{-1}.