Diseases **2014**, *2*, 71-92; doi:10.3390/diseases2020071

OPEN ACCESS

diseases

ISSN 2079-9721

www.mdpi.com/journal/diseases/

Review

Intercalated Cells: More than pH Regulation

Ensaf Y. Almomani [†], Sumanpreet Kaur [†], R. Todd Alexander and Emmanuelle Cordat *

Membrane Protein Research Group, Department of Physiology, Room 734, University of Alberta, Edmonton, Alberta T6G 2H7, Canada

[†] These authors contributed equally to this work.

* Author to whom correspondences should be addressed; E-Mail: cordat@ualberta.ca; Tel.: +1-780-492-8892; Fax: +1-780-492-8915.

Received: 22 January 2014; in revised form: 19 March 2014 / Accepted: 20 March 2014 / Published: 8 April 2014

Abstract: The renal collecting duct is the nephron segment where the final urine content of acid equivalents and inorganic ions are determined. The role of two different cell types present in this nephron segment has been determined many years ago: principal cells that express the epithelial sodium channel ENaC and aquaporin 2, regulate electrolyte reabsorption, while intercalated cells, which express acid-base transporters and vacuolar H^+-ATPase, maintain an apropriate acid-base balance. Recent evidence challenges this historical view. Rather than having independent and non-overlapping functions, the two cell types in the collecting duct appear to functionally cooperate to regulate acid-base and volume homeostasis via complex paracrine and endocrine interplay. This review summarizes these recent findings.

Keywords: intercalated cells; principal cells; acid-base homeostasis; collecting duct; volume homeostasis; acid-base transporters; sodium; chloride; hypertension

---

1. Introduction: Acid-Base Balance and Role of the Kidney

The western diet generates an excess of protons that would dramatically alter intracellular and plasma pH if not strictly regulated. Plasma bicarbonate (on average 24 mM) buffers the acids generated from our metabolism. As it is freely filtered by the renal glomerulus, bicarbonate must be efficiently reabsorbed to maintain blood levels. This occurs via the action of two main organs: the

lungs through expulsion of volatile carbon dioxide, and the kidneys by reabsorbing filtered bicarbonate back into the blood and by *de novo* generating bicarbonate ions.

Filtered bicarbonate is predominantly reabsorbed from the proximal convoluted tubule (Figure 1) (at least 80%) by the concomitant action of cytosolic and luminal carbonic anhydrases, the apical sodium-proton exchanger 3 and the basolateral sodium-bicarbonate cotransporter NBC1 [1,2]. The remaining bicarbonate is reabsorbed from the thick ascending limb of the loop of Henle, the distal nephron, specifically the distal convoluted tubule & the connecting tubule, and finally the cortical and both the outer and inner medullary collecting duct [3,4]. As the last segment of the nephron where bicarbonate reabsorption and urine acidification can be fine-tuned, this final segment plays an essential role in one's acid-base balance, as highlighted by patients who develop distal renal tubular acidosis (see Section 7). In this latter segment of the nephron, two cell types co-exist: principal cells and intercalated cells, whose respective roles have historically been thought to be independent. Principal cells are involved in sodium and water reabsorption via the apical epitelial sodium channel ENaC and aquaporin 2, respectively. Intercalated cells participate in acid-base homeostasis. In this review, we have focused on the function of intercalated cells as recent findings challenge the role historically attributed to these cells as exclusively involved in acid-base homeostasis. Here, we review the long-established function of intercalated cells in acid-base regulation and we then summarize the emerging role of these cells in chloride and sodium homeostasis. We also review their amazing plasticity to inter-convert from one type to another, and their involvement in human pathologies.

Figure 1. Nephron anatomy model including the fractional delivery of bicarbonate to the various nephron segments. The fractional delivery (FD) values of bicarbonate to the various sites are only indicative, as they vary with an individual's diet [5]. PCT: proximal convoluted tubule, TDL: thin descending limb, LH: loop of Henle, MTAL: medullary thick ascending limb, CTAL: cortical thick ascending limb, DCT: distal convoluted tubule, CNT: connecting tubule, CCD: cortical collecting duct, OMCD: outer medullary collecting duct, IMCD: inner medullary collecting duct.

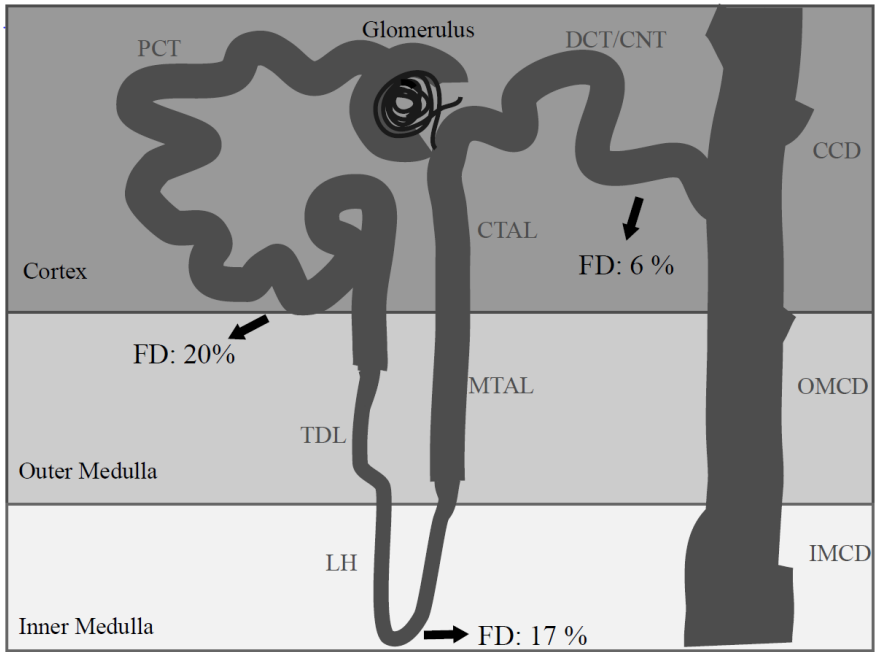

2. Renal Intercalated Cells: Mirror Cells?

Kidney cortical collecting duct (CCD) contains at least two different cell types: principal cells that transport water, Na^+ and K^+, and intercalated cells, which mediate acid-base transport [6] (Figure 2). In mouse, rat and rabbit connecting tubule (CNT), CCD and outer medullary connecting duct (OMCD), intercalated cells represent approximately 40% of all cells [7–12]. The respective percentages of type-A, type-B and non-A, non-B intercalated cells vary between nephron segments and species as shown in Table 1. Intercalated cells express high amounts of cytosolic carbonic anhydrase II and are interspersed among the principal cells of the distal convoluted tubule (DCT), connecting tubule (CNT), and collecting duct [9,11,13]. They are distinguished from other cell types by their positive staining for the vacuolar H^+-ATPase and carbonic anhydrase II (CAII), by their dark cytoplasm and high mitochondrial density [10,11]. Three kinds of morphologically and immunologically different intercalated cells have been identified in mouse kidney and named type-A, type-B, and non-A, non-B intercalated cells [9,13].

Table 1. Percentages of intercalated cells in various distal nephron segments in mouse, rat and rabbit. These rough percentages were assessed using electron microscopy and immunohistochemistry. The variations are likely due to diet differences and therefore may not reflect the situation in humans. CNT, connecting tubule, CCD, cortical collecting duct, OMCD, outer medullary collecting duct, IMCD, inner medullary collecting duct. These numbers are from [12,13,15–17].

Nephron Segmen	**Type-A IC**	**Type-B IC**	**Non-A, non-B IC**
CNT	35%–40% of IC in mouse predominant in rat and rabbit	present in mouse predominant in the initial CNT	50% of IC of mouse 14% of IC in rat
CCD	60% of IC in mouse 45% of IC in rat	20% of IC in mouse 50% of IC in rat	20% of IC in mouse 5% of IC in rat
OMCD	100% of IC in mouse predominant in rat and rabbit	0% in mouse	0% in mouse
IMCD	100% of IC in mouse	0% in mouse	0% in mouse

Type-A intercalated cells have a columnar shape with apical microprojections and tubulovesicular structures under the apical surface. These cells express the kidney anion exchanger 1 (the kidney isoform of band 3) at their basolateral membrane and vacuolar H^+-ATPase is expressed at the apical side (Figure 2). Type-A intercalated cells are characterized by a robust apical endocytosis that regulates the amount of vacuolar H^+-ATPase under acid load conditions [6,10].

Almost mirroring the type-A intercalated cells, type-B intercalated cells display the opposite polarity, with the bicarbonate exchanger pendrin located at the apical membrane and vacuolar H^+-ATPase at the basolateral membrane (Figure 2). This opposite polarity not only reflects a re-location of key proteins to opposite membranes but also the expression of different bicarbonate transporters. With their squamous shape, type-B intercalated cells have a smooth apical surface, an organelle-free zone below the apical membrane, and cytoplasmic vesicles dispersed throughout the cells. Additionally, these cells bind peanut agglutinin, in contrast to type-A intercalated cells [9,13,14].

Specific binding of type-B intercalated cells to peanut agglutinin has become a useful tool to study intercalated cells remodeling under acidic conditions as detailed in Section 5.

Figure 2. Model illustrating the collecting duct cell types. Type-A intercalated cells secrete protons into the lumen through the apical vacuolar H^+-ATPase proton pump and the H^+/K^+-ATPase, and reabsorb HCO_3^- in exchange for Cl^- through the basolateral kidney by carbonic anhydrase II (CAII). Additionally, these cells express two potential chloride/bicarbonate exchangers, the basolateral SLC26A7 and the apical SLC26A11. The Na^+-K^+-$2Cl^-$ cotransporter (NKCC1) is also expressed at the basolateral membrane of these cells, along with the chloride channel ClC-Kb. Type-B intercalated cells secrete HCO_3^- into the lumen through apical pendrin and protons are effluxed into the blood through the basolateral vacuolar H^+-ATPase. These cells also express the ClC-Kb chloride channel and SLC26A11 at their basolateral membrane. At the apical membrane, pendrin's function is coupled to that of SLC4A8 to promote sodium and chloride reabsorption. Principal cells regulate ion homeostasis by expressing the epithelial sodium channel (ENaC), a K^+/Cl^- cotransporter (KCC), the water channel aquaporin 2 (AQP2) and the renal outer medullary potassium (ROMK) channel in their apical plasma membrane, and the sodium/potassium ATPase at the basolateral membrane. So far, no basolateral chloride channel has been identified in these cells.

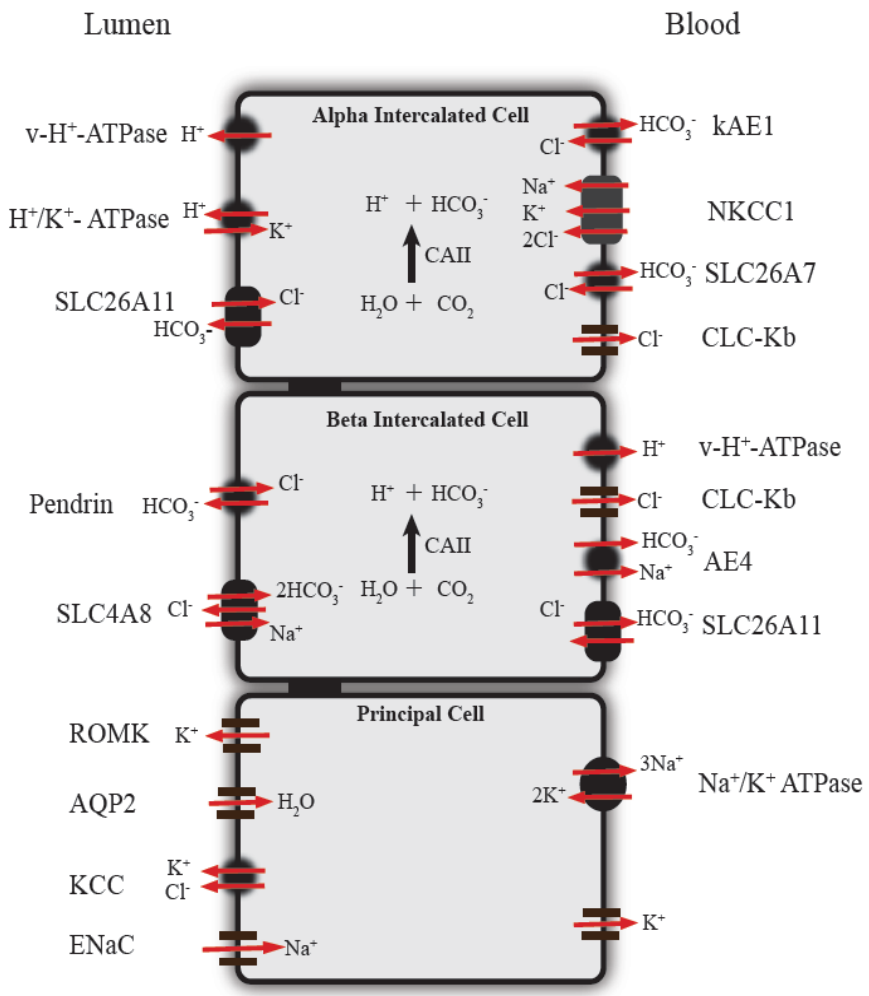

Non-A, non-B intercalated cells are mainly located in the CNT and the proximal collecting tubule. These large cells express both pendrin and vacuolar H^+-ATPase at their apical membrane, and display a large number of mitochondria and intracellular vesicles [13]. The function of non-A, non-B intercalated cells is not known. The presence of apical vacuolar H^+-ATPase and bicarbonate transporter suggests that these cells could be involved in either proton or bicarbonate secretion or that they are an intermediate cell-type undergoing interconversion as detailed below [9,13].

3. Function of Renal Intercalated Cells in Acid-Base Regulation

Intercalated cells are enriched in mitochondria, and express proteins involved in transport of proton equivalents such as vacuolar H^+-ATPase, carbonic anhydrase II and bicarbonate transporters [1,18]. These characteristics suggest a role for these cells in acid-base regulation [19].

With their apical vacuolar H^+-ATPase and basolateral kidney anion exchanger 1 (Figure 2), type-A intercalated cells, were implicated early on in active proton secretion into the tubular lumen. Carbon dioxide enters the cells where carbonic anhydrase II catalyzes its hydration to produce one bicarbonate ion and a proton. The proton is pumped across the apical membrane via the vacuolar H^+-ATPase and the bicarbonate ion is transported across the basolateral membrane by the kidney anion exchanger 1 protein [1,20]. Therefore, the function of type-A intercalated cells results in both net reabsorption of bicarbonate and concomitant proton secretion into the urine.

Type-B intercalated cells are thought to mirror type-A intercalated cells as they have almost the opposite polarity. Also rich in carbonic anhydrase II, these cells instead reabsorb protons via the basolateral vacuolar H^+-ATPase and excrete bicarbonate into the urine via the apical bicarbonate transporter pendrin [21]. As menioned earlier, the function of non-A, non-B IC remains obscure.

Over the years, the molecular identity of proteins involved in these opposite physiological functions has become clearer. For example, at the basolateral membrane of type-A intercalated cells, SLC26A7 appears to have a role in bicarbonate reabsorption linked to that of kidney anion exchanger 1 [22]. SLC26A7 acts as a pH-sensitive chloride channel which mediates Cl^-/HCO_3^- exchange by recycling Cl^- and reabsorbing bicarbonate [23]. Deletion of SLC26A7 results in distal renal tubular acidosis [24]. At the apical membrane of type-B intercalated cells, expression of the bicarbonate transporter SLC4A8 functionally complements that of pendrin (SLC26A4) as outlined below [25]. Water movement across the apical membrane of type-B intercalated cells may be facilitated by expression of aquaporin 5 [26]. Interestingly, a recent report demonstrated that while the Na^+/K^+- ATPase is required to energize principal cells of the collecting duct, the vacuolar H^+-ATPase rather than the Na^+/K^+- ATPase, appears to be essential in maintaining cell volume and resting membrane potential in intercalated cells [27]. In fact, expression of the Na^+/K^+- ATPase in intercalated cells remains controversial [8,28–31].

In agreement with the role of intercalated cells in regulation of systemic acid-base balance, these cells are equipped with a range of tools that allows them to sense and respond to changes in acid-base balance. Among the many sensors spread over the nephron, some are specifically active in intercalated cells. Soluble adenylyl cyclase (sAC) is directly activated by CO_2 and bicarbonate concentrations and its activity is also modulated by calcium [32,33]. In type-A and type-B intercalated cells, activated sAC it produces a sAC-dependent rise in cAMP resulting in translocation of vacuolar H^+-ATPase to the apical membrane, and further proton pumping to the lumen [34]. Another potential pH sensor is the

alkali sensor insulin receptor-related receptor (InsR-RR), which is expressed in type-B intercalated cells and non-A, non-B intercalated cells [35]. During alkalosis, InsR-RR is activated by alkaline pH both *in vitro* and *in vivo* and is thought to stimulate secretion of bicarbonate by type-B intercalated cells [36]. Finally, a number of channels such as the renal outer medulary potassium channel ROMK and some aquaporins have their activities modulated by intracellular or extracellular proton concentrations [37].

4. Emerging Roles of Intercalated Cells in the Regulation of Electrolyte Homeostasis

With the identification of pendrin as the apical chloride/bicarbonate exchanger in type-B intercalated cells ten years ago [38], a new functional role emerged for intercalated cells. The traditional view of principal cells being predominantly involved in sodium and potassium exchange and intercalated cells being responsible for acid or base secretion, has been challenged by evidence demonstrating that the different collecting duct cell types functionally overlap. Principal cells apically express the epithelial sodium channel ENaC, which regulates sodium reabsorption in a vasopressin- and aldosterone-dependent pathway. Chloride reabsorption was thought to occur predominantly via a passive, paracellular pathway with a smaller transcellular component. The transcellular pathway was assumed to occur via apical chloride/bicarbonate exchange and a basolateral chloride channel expressed in type-B-intercalated cells [39]. The group of Susan Wall first demonstrated that on a NaCl restricted diet, slc26a4 knockout mice were hypotensive and failed to reabsorb chloride, in contrast to wild-type animals [40]. Further, over-expression of pendrin in intercalated cells resulted in chloride-sensitive hypertension [41]. In agreement with these previous findings, pendrin function was found to be up-regulated by angiotensin II and aldosterone [42,43]. Thus, these studies provided a molecular pathway for the coordinated reabsorption of water and sodium ions by principal cells and chloride ions via type-B intercalated cells.

Additionally, significant electroneutral and thiazide-sensitive sodium reabsorption was found in type-B intercalated cells [44], which persisted in mice lacking alpha ENaC [45]. This finding supported the presence of an alternative sodium reabsorption pathway in the collecting duct. Further work from Drs. Eladari and Chambrey's groups identified this other molecular pathway to occur through the sodium-driven chloride/bicarbonate exchanger NDCBE/SLC4A8, which works in tandem with pendrin at the apical membrane of type-B intercalated cells to mediate net reabsorption of sodium and chloride [25,46]. The sodium acumulated intracellularly via the concomitant activity of apical SLC4A8 and pendrin was shown to exit the basolateral membrane of type-B intercalated cells through AE4 (slc4a9) protein [27]. Thus, according to these new findings, intercalated cells are not only required to regulate bicarbonate excretion in the urine but are also involved in transcellular reabsorption of sodium and chloride ions. These novel findings reconcile the findings from Sebastian and colleagues who observed that some patients with distal renal tubular acidosis have an urinary loss of sodium and chloride that is sustained even upon correction of the acidosis [47].

5. Interconversion of Intercalated Cells

A fascinating aspect of intercalated cells is that they can convert from one type to another depending on acid-base status. More than twenty years ago, studies showed that feeding rabbits an acid diet for 20 hours resulted in a four-fold decrease in the number of peanut agglutinin binding cells

without altering the total number of intercalated cells, supporting internalization and degradation of the peanut agglutinin binding sites [14]. These studies infer that a change in diet could result in conversion of type-B intercalated cells to type-A intercalated cells, a phenomenon called "plasticity of epithelial polarity" [6,14]. To study the molecular basis of epithelial intercalated cells' plasticity, an immortalized cell line of type-B intercalated cells was generated [48]. Primary type-B intercalated cells were isolated from rabbit kidneys and transfected with a plasmid encoding a temperature-sensitive mutant of the large T antigen of SV40. This allowed the continuous division of the cells at permissive temperature to form a monolayer of type-B intercalated cells. These immortalized cells demonstrated multiple characteristics of type-B intercalated cells: negative staining for the basolateral chloride/bicarbonate exchanger, positive staining for the vacuolar H^+-ATPase at the basolateral membrane and binding the peanut lectin at the apical membrane.

When the immortalized type-B intercalated cells were seeded at low density and allowed to become confluent, they were found to retain characteristics of type-B intercalated cells. However, when plated at high density, they converted to acid-secreting cells within a few hours, a characteristic of type-A intercalated cells [49]. Van Adelsberg and colleagues determined that at high density, these cells produced an extracellular matrix (ECM) protein, later identified as hensin (see below) [50], which induces reversion of polarity of the chloride/bicarbonate exchanger location from apical to the basolateral membrane. Later studies identified that the reversion of polarity is in fact likely due to down-regulation of apical pendrin [21] and synthesis of basolateral kidney anion exchanger 1. This conversion of type-B to type-A intercalated cells also induced robust apical endocytosis and alteration in cell morphology, as they became more columnar like type-A intercalated cells.

A large multi-domain protein called hensin ("change in shape" in Japanese) or DMBT1 was purified from the extracellular matrix and found to induce the epithelial cell conversion process when secreted as a multimeric protein [51]. Antibodies for hensin prevented this effect, indicating that hensin is necessary for conversion of polarity. In fact, soluble hensin was synthesized by both low density and high density type-B intercalated cells, but only hensin secreted by high density type-B intercalated cells was observed in the extracellular matrix. Sucrose density gradient analysis of soluble hensin showed that low density cells secrete monomeric hensin, and high density cells secrete higher order multimers. High density cells caused aggregation of monomeric hensin, suggesting that the multimerization resulted from surface events in the high density cells [51].

To confirm that type-B intercalated cells are progenitors of type-A intercalated cells, mice lacking hensin in the intercalated cell lineage were generated [50]. Deletion of hensin did not affect the percentage of intercalated cells from the total number of cells in the CCD, relative to principal cells [50]. However, immunological studies revealed that all the cortical intercalated cells in the mutant mice were type-B intercalated cells, with apical pendrin and basolateral or diffuse/bipolar vacuolar H^+-ATPase expression as compared to only 30% of intercalated cells being type-B in the wild type mice. In the medulla of the knockout mice, a new cell type was identified, which resembled the cortical type-B intercalated cells in ultrastructure, but did not express pendrin. The presence of type-B intercalated cells exclusively and the absence of type-A acid secreting cells in the collecting duct of the hensin knockout mice resulted in continuous bicarbonate secretion, which caused metabolic acidosis and complete distal renal tubular acidosis (see below) [50].

Additional work dissected the role of hensin polymerization on intercalated cell conversion. Acidosis induces hensin polymerization and deposition, a process that involves β1 integrin [50]. Deletion of β1 integrin expression from intercalated cells caused a phenotype that was identical to the deletion of hensin, consistent with hensin and integrin being important functional partners for intercalated cell conversion. Additionally, hensin requires the interaction with galectin 3 to polymerize in the extracellular matrix and promote the conversion of the cells [52]. The peptidyl prolyl cis-trans isomerase activity of cyclophilin A was also found to be necessary to initiate the hensin polymerization process [53]. When cyclophilin A was blocked by the cyclosporin A immunosuppressant, it prevented hensin polymerization and caused distal renal tubular acidosis (see below).

The renal collecting tubule contains two different cell types, intercalated cells and principal cells. This pattern of differentiation in the collecting duct may be driven by a process called "lateral inhibition", which involves various key regulating processes requiring the Notch signaling pathway and Foxi1 transcription factors.

Lateral inhibition is a process in which a cluster of cells differentiate through a specific signal, such as the activation of the Notch surface receptor, while neighbor cells remain "deaf" to this signal and retain their undifferentiated state [54]. Notch signaling was indeed found to play a key role in renal collecting duct development. Deletion of Notch signaling from the mouse collecting duct increased the number of intercalated cells, whereas overexpression of active Notch intracellular domain in the collecting duct resulted in the absence of intercalated cells, and the only cell type present was principal cells [55]. Active Notch signaling seems to promote the ureteric bud cells to develop into principal cells, whereas inactive Notch signaling promotes the formation of intercalated cells.

Forkhead 1 (Foxi1) also plays an important role in renal development, as it regulates expression of pendrin, a protein expressed in both the inner ear and in type-B intercalated cells of the kidney. Foxi1 is expressed in the distal nephron and in the endolymphatic duct/sac epithelium of the inner ear in mice at embryonic stage E16 and E11.5, respectively [56]. Mice lacking the Foxi1 gene are deaf, have disturbed balance and do not express pendrin, suggesting that Foxi1 could be an upstream regulator of Pendrin. Foxi1 null mice produce an alkaline urine compared with WT mice, a symptom resembling distal renal tubular acidosis [57]. Northern blots and immunohistochemistry experiments on kidneys of Foxi1 null mice revealed the absence of kidney anion exchanger 1, pendrin and anion exchanger 4 [58]. In fact, examination of the collecting duct epithelium of Foxi1 mice revealed the presence of a single cell type that was positive for both principal and intercalated cell markers [57]. Although Atp6v1b1 mRNA expression was similar to that of WT mice, the vacuolar H^+-ATPase protein product was not detected in Foxi1 null kidneys due to inefficient translation or rapid protein degradation. A more recent study showed that the lack of Foxi1 expression in mice causes the absence of A (Atp6v1a), B1 (Atp6v1b), E2 (Atp6v1e2), and a4 (Atp6v0a4) subunits that normally form the vacuolar H^+-ATPase in three different epithelia (inner ear, kidney and epididymis) [59]. Thus, Foxi1 and Notch signaling appear to be two upstream regulators of intercalated cell formation.

The literature also contains reports demonstrating the conversion of intercalated cells into principal cells. Culture of isolated and sorted type-B intercalated cells can result in the appearance of principal cell characteristics, such as amiloride-sensitive sodium reabsorption and ability to secrete potassium [60]. Lithium, a commonly prescribed therapy for bipolar mood disorder, causes nephrogenic diabetes insispidus (NDI) in 50% of the patients [61]. Lithium-induced NDI results from a down-regulation of

aquaporin-2 expression in principal cells [62], originating from lithium-induced arrest of principal cells division [63]. Interestingly, after discontinuation of lithium treatment, a transient cell type has been identified that shares both principal and intercalated cell characteristics, including vacuolar-H^+-ATPase and aquaporin 2 expression [64]. Thus, intercalated cells are extraordinarily plastic as they can not only convert from one type to another, but they can also convert into principal cells.

6. Regulation of Intercalated Cell Function

Evidence of functional cooperation between the various intercalated cell types raises one central question: how is this inter-cellular cooperation regulated? As intercalated cells are involved in salt homeostasis, mineralocorticoid hormones regulate total or plasma membrane expression levels of a number of key intercalated cell proteins. For example, total pendrin expression and transport activity are increased by aldosterone [65], via a nitric oxide and cAMP dependent mechanism [66]. Further, the effects of angiotensin II and aldosterone on collecting duct acidification have also been reported in early studies [67–72]. Angiotensin II and aldosterone stimulate vacuolar H^+-ATPase activity by increasing its abundance in the plasma membrane [73], via the action of G protein, phospholipase C, protein kinase C and extracellular signal-regulated kinase (ERK) 1/2 proteins [74,75]. Aldosterone also acts in a parallel pathway through cyclic AMP and protein kinase A [75]. In the Madin-Darby canine kidney (MDCK).C11 model cell line that resembles intercalated cells, the prorenin receptor, which is an accessory protein of the vacuolar H^+-ATPase, plays an important role in regulating ATPase activity [76]. Finally, in the kidney medulla, aldosterone or high dietary sodium bicarbonate increases AE1 expression levels [77]. As aldosterone also regulates plasma membrane abundance of the epithelial sodium channel ENaC in neighbouring principal cells [78], both angiotensin and aldosterone act on both principal cells and intercalated cells. A molecular mechanism regulating intercalated cell signaling was recently proposed by Shibata and colleagues. They demonstrated that a single phosphorylation at serine 843 in the mineralocorticoid receptor expressed in type-A and type-B intercalated cells prevents ligand binding to the receptor and is able to block aldosterone signaling and chloride reabsorption [79]. Dephosphorylation, likely via protein phosphatase 1, increases surface expression of electrolyte flux mediators, predominantly in type-B intercalated cells.

In addition to the effects of aldosterone and angiotensin II on the function of proteins expressed in intercalated and principal cells, a number of paracrine signaling pathways are emerging and have been extensively reviewed in [80]. One such mechanism occurs via purinergic signaling. Mice deficient in the P2Y2 purinergic receptor have sodium imbalance and hypertension [81]. Release of the purinergic receptor substrate, ATP, by intercalated cells was proposed to occur via connexin Cx30 proteins [82] and may alter potassium channels either at the apical side of principal cells or intercalated cells while inhibiting sodium and water reabsorption [83,84]. Further, Gueutin and colleagues recently demonstrated that ATP-triggered prostaglandin E2 release by type-B-intercalated cells participates in hydroelectric imbalance as observed in dRTA patients where impairment of ENaC activity occurs in neighboring principal cells [46]. Other modulators of water and salt reabsorption include the G protein coupled receptor OXGR1, which is apically located in type-B and non-A, non-B intercalated cells. This receptor is sensitive to local accumulation of dicarboxylate such as alpha ketoglutarate that can locally accumulate in the distal nephron [85,86]. Another modulator is the vasodilator bradykinin, which can

bind to its B2 receptors in the basal side of collecting duct cells [87,88]. Therefore, there is a growing body of evidence supporting that intercalated cells are not only involved in acid-base homeostasis but also in electrolyte balance as reviewed in [89].

7. Diseases Associated with Abnormal Intercalated Cells Function and Animal Models (Table 2)

The abnormal functioning of intercalated cells causes a variety of diseases that mostly affect acid-base balance with mild impairment in electrolyte homeostasis.

Table 2. Diseases associated with abnormal intercalated cell function.

Protein	Disease and Symptoms	Mutated gene	Knockout mice symptoms	References
Kidney anion exchanger 1 (kAE1)	**Distal renal tubular acidosis (dRTA)** Metabolic acidosis, alkaline urine, hypokalemia, hyperchloremia, hypercalciuria, kidney stones, mild electrolyte imbalance	**SLC4A1**	Severe anemia, complete dRTA, increased serum osmolarity, decreased urine osmolarity, hypercalciuria, dehydration	[90–92]
vATPase subunit B1	Recessive **dRTA** associated with deafness, hypokalemia and dehydration	**ATP6V1B1**	Mild metabolic acidosis	[93–95]
vATPase subunit a4	Recessive **dRTA** associated with deafness, hypokalemia and dehydration	**ATP6V0A4**	Deafness, dRTA accompanied by unsuspected proximal tubule malfunction, proteinuria and phosphaturia	[95–97]
SLC26A7	**dRTA**	**SLC26A7**	Complete dRTA, hypotension, failure to reabsorb chloride	[22,24]
Carbonic anhydrase II	Mixture of recessive **distal and proximal RTA**, can be associated with autosomal recessive osteopetrosis (increased bone density), growth failure, mental retardation and hearing impairment	**CA2**	Renal tubular acidosis symptoms, down-regulation of proteins involved in acid-base homeostasis in intercalated cells such as SLC26A7, pendrin and AE1	[98–101]
Pendrin	**Pendred syndrome** Goiter and hearing loss	**SLC26A4**	Renal inability to excrete the excess bicarbonate into the urine, deafness	[38,56,102,103]

Plasma pH must be tightly regulated between 7.38 and 7.42 in order to maintain normal cell function. A decrease in plasma bicarbonate concentration causes a drop in plasma pH and this condition is known as metabolic acidosis [20,104]. As mentioned earlier, the renal proximal tubule plays an essential role in bicarbonate reabsorption. Upon synthesis of protons and bicarbonate by the cytosolic carbonic anhydrase II, the basolateral sodium/bicarbonate exchanger NBCe1 (encoded by SLC4A4 gene) mediates reabsorption of filtered bicarbonate, while protons are secreted into the pro-urine via the apical sodium/proton exchanger, NHE3 [1,105]. In the distal nephron, intercalated cells mediate the fine-tuning of bicarbonate reabsorption, by reabsorbing the remaining filtered bicarbonate through basolateral kidney anion exchanger 1 and excreting protons via the apical vacuolar H^+-ATPase. Distal renal tubular acidosis (dRTA) is characterized by the inability of type-A intercalated cells to excrete acids into the urine (Table 1). As proton excretion is coupled to bicarbonate reabsorption, a decrease in protons excreted into the urine in the distal nephron results in a decrease in plasma bicarbonate

concentration. Interestingly, dRTA patients also develop a mild electrolyte imbalance with abnormal urinary excretion of sodium and chloride [47].

Distal renal tubular acidosis can arise from genetic or immune defects as well as a side effect of drugs affecting type-A intercalated cells. Familial dRTA can be autosomal dominantly and recessively inherited [90]. Loss-of-function mutations in the SLC4A1 gene lead to abnormal functioning of the kidney anion exchanger 1 causing either autosomal dominant or recessive dRTA. This abnormal functioning results in defective bicarbonate reabsorption through the basolateral side of type-A intercalated cells. Mutations in the B1 subunit of the cytosolic V1 ATPase complex or the a4 subunit of the V0 transmembrane pore complex of the vacuolar H^+-ATPase cause recessive dRTA associated with deafness. Mutations in carbonic anhydrase II lead to a mixture of recessive distal and proximal RTA, which is often associated with autosomal recessive osteopetrosis (increased bone density), growth failure, mental retardation and hearing impairement [106].

The molecular basis for recessive *versus* dominant familial dRTA caused by mutated anion exchanger 1 has been clarified recently. Heterologous expression of the kidney anion exchanger 1 in Madin-Darby canine kidney (MDCK) cells shows that it is functional and localizes to the basolateral membrane, reflecting the location of this exchanger in native cells [107–109]. In these cells and in human embryonic kidney 293 cells, expression of dominant or recessive dRTA mutants of the anion exchanger 1 demonstrates mis-trafficking of the mutant, varying from intracellular retention in the endoplasmic reticulum or the Golgi to apical mis-localization [107–110]. Co-expression of intracellularly retained dominant dRTA mutants of the kidney anion exchanger 1 with wild-type (WT) kidney anion exchanger 1 retained the WT protein intracellulary [107,111,112]. In contrast, when co-expressed with a recessive dRTA mutant of the anion exchanger 1, the WT protein rescued cell surface trafficking of the mutant.

Distal RTA can also originate from autoimmune disorders such as systemic lupus erythematosus and Sjogren syndrome [113], and from chronic liver diseases [114], but the pathogenicity of these causes of acquired dRTA are much less well understood.

Patients with either a mutated a4 or B1 subunit of the vacuolar-type H^+-ATPase have complete dRTA, hearing loss, hypokalemia and dehydration [115,116]. Mice lacking the B1 subunit of the vacuolar-type H^+-ATPase have abnormal urinary acidification upon acid challenge but do not develop spontaneous acidosis and had normal hearing [93,94]. This mild phenotype was caused by the compensatory over-expression of alternate B2 subunit of the ATPase [117]. Knockout of the vacuolar H^+-ATPase a4 subunit resulted in a more severe phenotype in two independent mouse models [96,97]. In both animal lines, knocking out the a4 subunit resulted in severe deafness due to expanded cochlear and endolymphatic ducts [118], impaired sense of smell [97,119] and spontaneous metabolic acidosis. The a4 knockout mice also developed hypocitraturia and early nephrocalcinosis [97]. Furthermore, development of dRTA was accompanied by an unsuspected proximal tubule defect, specifically low molecular weight proteinuria and phosphaturia [96]. Interestingly, proximal tubular cells of the knockout mice showed abnormal endocytic traficking and accumulation of lysosomal materials. As this phenotype resembles that of anion exchanger pendrin knockout mice, it was proposed that pendrin and the proton pump not only cooperate in intercalated cells of the kidney but also in the inner ear for endolymph homeostasis.

Twenty years ago, two mouse models knocked out for the anion exchanger 1 were generated [120,121]. These mice, which were either lacking the erythrocyte anion exchanger 1 or both erythrocyte and renal anion exchangers 1, had a similar phenotype: 85% of the newborn mice died within two weeks after birth and the surviving animals developed severe anemia due to the premature degradation of their red blood cells. Characterization of potential renal defects was not described at that time. Ten years later, Stehberger and colleagues reported that the mice lacking the anion exchanger 1 have characteristics of complete dRTA and express many features of the human disease [91]. Mice deficient in the anion exchanger 1 displayed a urinary concentrating defect with increased serum osmolarity, decreased urine osmolarity and consequently increased urine output leading to dehydration. The urinary concentrating malfunction correlated with altered expression and localization of aquaporin-2 water channels in principal cells, thus highlighting again that principal and intercalated cell functions are inter-dependent. These studies showed that the anion exchanger 1 plays an important role in maintaining acid-base homeostasis by distal regeneration of bicarbonate in mouse and human kidneys.

Interestingly, Sun and colleagues observed that in AE1 knockout mice, a 4-day acid load increased Slc26a7mRNA and protein levels in both the outer and inner medulla [22]. In agreement with this finding, genetic ablation of SLC26A7 in mouse intercalated cells induced a metabolic acidosis and alkaline urine pH, characteristics of distal renal tubular acidosis [24]. As AE1 knockout mice develop dRTA, increased expression of Slc26a7 cannot compensate for the absence of AE1 and vice-versa.

Carbonic anhydrase II is very abundantly expressed in proximal tubular cells, intercalated cells and in osteoclasts. Patients with a deficiency in carbonic anhydrase II develop intracranial calcifications and mental retardation in addition to renal tubular acidosis and osteopetrosis [98–100]. Mice deficient for carbonic anhydrase II develop renal tubular acidosis similar to that of humans deficient in this protein; however osteopetrosis and cranial calcification were not observed in the murine model [101]. These mice displayed a marked down-regulation of proteins involved in acid-base homeostasis in intercalated cells such as SLC26A7, pendrin and AE1 but no change in aquaporin 2 expression was observed [122].

Genetic ablation of pendrin and SLC4A8 confirmed their role in acid-base balance as well as electrolyte homeostasis (Figure 2). Mutated pendrin causes Pendred syndrome, which is characterized by sensorineural deafness and abnormal organification of iodide in the thyroid [102]. Mutations on the gene encoding pendrin rarely cause impaired acid-base balance under ambient conditions [123,124]. However, the lack of renal pendrin expression resulted in a lower bicarbonate excretion than in WT mice, after administration of the aldosterone analogue deoxycorticosterone, and in a severe metabolic alkalosis, characterized by impaired renal ability to properly excrete an excess of bicarbonate in the urine [38]. In addition, sodium and chloride restriction increased urine output, enhanced intravascular volume depletion and hypotension [40]. This is partially due to downregulation of epithelial sodium channel (ENaC) expression that lowers its capacity to preserve sodium [125]. In the apical membrane of the distal convoluted tubule, the thiazide-sensitive sodium/chloride cotransporter NCC compensates for the genetic ablation of pendrin or carbonic anhydrase II [126,127]. Additionally, genetic disruption of the SLC4A8 protein abolished the thiazide-sensitive, amiloride-resistant sodium and chloride reabsorption by type-B intercalated cells [25], confirming the role of this protein in electrolyte reabsorption.

Multiple animal models lacking subunits of the vacuolar H^+-ATPase have been generated. Mice lacking the B1 subunit display a mild metabolic acidosis [94] but deletion of the a4 subunit has a more dramatic effect on urine acidification [96], confirming the essential role of this protein in proton secretion into the urine. Recent data support that vacuolar H^+-ATPase activity is more important than that of the sodium/potassium ATPase in maintaining cell volume and resting membrane potential in intercalated cells [27].

8. Conclusions and Future Directions

Although the functional role of principal and intercalated cells has been established a long time ago, recent advances highlight that cells in the heterogenous collecting duct have not yet revealed all their secrets. While type-A intercalated cells seem to remain predominantly involved in acid-base homeostasis by pumping protons into the urine and reabsorbing bicarbonate, type-B intercalated cells appear to have a dual role in both regulating acid-base homeostasis and sodium-chloride reabsorption. Thus, principal cells are not the only ones in this nephron segment involved in water and electrolyte reabsorption. It would be surprising if, interspersed within principal and type-B intercalated cells, the role of type–A intercalated cells was restricted uniquely to acid-base balance. Like type-B intercalated cells, type-A intercalated cells are also equipped with proteins that could potentially affect volume homeostasis. For instance, some evidence point to a role of the kidney anion exchanger 1 in type-A intercalated cells in regulation of electrolyte reabsorption, as single nucleotide polymorphisms within SLC4A1 have been associated with the development of hypertension [128].

Many exciting questions remain to be answered. For example, the collecting duct reabsorbs chloride via both a transcellular and a paracellular pathway, but the role and regulation of the chloride paracellular reabsorption in this segment of the nephron remains unclear, as does the impact of this transcellular regulation on paracellular fluxes. Activity of the tight junction protein claudin-4 that is expressed in the collecting duct, is modulated via phosphorylation by aldosterone [129], supporting that paracellular flux of chloride may also be hormonally regulated. Additionally, a number of other molecules that could potentially influence acid-base homeostasis, such as SLC4A4 or SLC26A11 have been identified in these cells but whether they influence either electrolyte or acid-base homeostasis remains ill-defined. Overall, it appears that the up-coming years will potentially provide exciting novel functional roles for all these molecular determinants that will complete our functional picture of these heterogenous cell types in the distal nephron.

Acknowledgments

The laboratories of E. Cordat and R.T. Alexander are supported by the Kidney Foundation of Canada and the Canadian Institutes of Health Research (CIHR). RT Alexander is a recipient of an Alberta Innovates Health Solutions Clinical Investigator Award and a CIHR Clinician Scientist Award. E Cordat is supported by a KRESCENT New Investigator Award. We thank the researchers in the bicarbonate transport and renal intercalated cell fields for making this review possible and apologize for any citations we have omitted.

Authors Contributions

E. Almomani, S. Kaur, RT Alexander and E Cordat all participated in designing, writing and editing of the review.

Conflicts of Interest

The authors have no conflicts of interest to declare.

References

1. Cordat, E.; Casey, J.R. Bicarbonate transport in cell physiology and disease. *Biochem. J.* **2009**, *417*, 423–439.
2. Gross, E.; Hawkins, K.; Pushkin, A.; Sassani, P.; Dukkipati, R.; Abuladze, N.; Hopfer, U.; Kurtz, I. Phosphorylation of ser(982) in the sodium bicarbonate cotransporter knbc1 shifts the hco(3)(-): Na(+) stoichiometry from 3 : 1 to 2 : 1 in murine proximal tubule cells. *J. Physiol.* **2001**, *537*, 659–665.
3. Buerkert, J.; Martin, D.; Trigg, D. Segmental analysis of the renal tubule in buffer production and net acid formation. *Am. J. Physiol.* **1983**, *244*, F442–F454.
4. DuBose, T.D., Jr.; Pucacco, L.R.; Lucci, M.S.; Carter, N.W. Micropuncture determination of ph, pco2, and total co2 concentration in accessible structures of the rat renal cortex. *J. Clin. Invest.* **1979**, *64*, 476–482.
5. Brenner, B.M.; Rector, F.C. *Brenner & Rector's the Kidney*, 8th ed.; Saunders Elsevier: Philadelphia, PA, USA, 2008.
6. Schwartz, G.J.; Barasch, J.; Al-Awqati, Q. Plasticity of functional epithelial polarity. *Nature* **1985**, *318*, 368–371.
7. Alper, S.L.; Natale, J.; Gluck, S.; Lodish, H.F.; Brown, D. Subtypes of intercalated cells in rat kidney collecting duct defined by antibodies against erythroid band 3 and renal vacuolar h^+-atpase. *Proc. Natl. Acad. Sci. USA* **1989**, *86*, 5429–5433.
8. Holthofer, H.; Schulte, B.A.; Pasternack, G.; Siegel, G.J.; Spicer, S.S. Three distinct cell populations in rat kidney collecting duct. *Am. J. Physiol.* **1987**, *253*, C323–C328.
9. Kim, J.; Kim, Y.H.; Cha, J.H.; Tisher, C.C.; Madsen, K.M. Intercalated cell subtypes in connecting tubule and cortical collecting duct of rat and mouse. *J. Am. Soc. Nephrol.* **1999**, *10*, 1–12.
10. Madsen, K.M.; Tisher, C.C. Structural-functional relationships along the distal nephron. *Am. J. Physiol.* **1986**, *250*, F1–F15.
11. Schuster, V.L. Function and regulation of collecting duct intercalated cells. *Annu. Rev. Physiol.* **1993**, *55*, 267–288.
12. Verlander, J.W.; Madsen, K.M.; Tisher, C.C. Effect of acute respiratory acidosis on two populations of intercalated cells in rat cortical collecting duct. *Am. J. Physiol.* **1987**, *253*, F1142–F1156.

13. Teng-umnuay, P.; Verlander, J.W.; Yuan, W.; Tisher, C.C.; Madsen, K.M. Identification of distinct subpopulations of intercalated cells in the mouse collecting duct. *J. Am. Soc. Nephrol.* **1996**, *7*, 260–274.
14. Satlin, L.M.; Schwartz, G.J. Cellular remodeling of hco3(-)-secreting cells in rabbit renal collecting duct in response to an acidic environment. *J. Cell. Biol.* **1989**, *109*, 1279–1288.
15. Brown, D.; Hirsch, S.; Gluck, S. Localization of a proton-pumping atpase in rat kidney. *J. Clin. Invest.* **1988**, *82*, 2114–2126.
16. Schuster, V.L.; Fejes-Toth, G.; Naray-Fejes-Toth, A.; Gluck, S. Colocalization of h(+)-atpase and band 3 anion exchanger in rabbit collecting duct intercalated cells. *Am. J. Physiol.* **1991**, *260*, F506–F517.
17. Verlander, J.W.; Madsen, K.M.; Cannon, J.K.; Tisher, C.C. Activation of acid-secreting intercalated cells in rabbit collecting duct with ammonium chloride loading. *Am. J. Physiol.* **1994**, *266*, F633–F645.
18. Toei, M.; Saum, R.; Forgac, M. Regulation and isoform function of the v-atpases. *Biochemistry* **2010**, *49*, 4715–4723.
19. Weiner, I.D.; Hamm, L.L. Regulation of intracellular ph in the rabbit cortical collecting tubule. *J. Clin. Invest.* **1990**, *85*, 274–281.
20. Alper, S.L. Genetic diseases of acid-base transporters. *Annu. Rev. Physiol.* **2002**, *64*, 899–923.
21. Amlal, H.; Petrovic, S.; Xu, J.; Wang, Z.; Sun, X.; Barone, S.; Soleimani, M. Deletion of the anion exchanger slc26a4 (pendrin) decreases apical cl(-)/hco3(-) exchanger activity and impairs bicarbonate secretion in kidney collecting duct. *Am. J. Physiol. Cell. Physiol.* **2010**, *299*, C33–C41.
22. Sun, X.; Petrovic, S. Increased acid load and deletion of ae1 increase slc26a7 expression. *Nephron Physiol.* **2008**, *109*, p29–p35.
23. Kim, K.H.; Shcheynikov, N.; Wang, Y.; Muallem, S. Slc26a7 is a cl- channel regulated by intracellular ph. *J. Biol. Chem.* **2005**, *280*, 6463–6470.
24. Xu, J.; Song, P.; Nakamura, S.; Miller, M.; Barone, S.; Alper, S.L.; Riederer, B.; Bonhagen, J.; Arend, L.J.; Amlal, H.; *et al.* Deletion of the chloride transporter slc26a7 causes distal renal tubular acidosis and impairs gastric acid secretion. *J. Biol. Chem.* **2009**, *284*, 29470–29479.
25. Leviel, F.; Hubner, C.A.; Houillier, P.; Morla, L.; El Moghrabi, S.; Brideau, G.; Hassan, H.; Parker, M.D.; Kurth, I.; Kougioumtzes, A.; *et al.* The na+-dependent chloride-bicarbonate exchanger slc4a8 mediates an electroneutral na+ reabsorption process in the renal cortical collecting ducts of mice. *J. Clin. Invest.* **2010**, *120*, 1627–1635.
26. Procino, G.; Mastrofrancesco, L.; Sallustio, F.; Costantino, V.; Barbieri, C.; Pisani, F.; Schena, F.P.; Svelto, M.; Valenti, G. Aqp5 is expressed in type-b intercalated cells in the collecting duct system of the rat, mouse and human kidney. *Cell. Physiol. Biochem.* **2011**, *28*, 683–692.
27. Chambrey, R.; Kurth, I.; Peti-Peterdi, J.; Houillier, P.; Purkerson, J.M.; Leviel, F.; Hentschke, M.; Zdebik, A.A.; Schwartz, G.J.; Hubner, C.A.; *et al.* Renal intercalated cells are rather energized by a proton than a sodium pump. *Proc. Natl. Acad. Sci. USA* **2013**, *110*, 7928–7933.
28. Buffin-Meyer, B.; Verbavatz, J.M.; Cheval, L.; Marsy, S.; Younes-Ibrahim, M.; Le Moal, C.; Doucet, A. Regulation of na+, k(+)-atpase in the rat outer medullary collecting duct during potassium depletion. *J. Am. Soc. Nephrol.* **1998**, *9*, 538–550.

29. Kashgarian, M.; Biemesderfer, D.; Caplan, M.; Forbush, B., 3rd. Monoclonal antibody to na,k-atpase: Immunocytochemical localization along nephron segments. *Kidney Int.* **1985**, *28*, 899–913.
30. Piepenhagen, P.A.; Peters, L.L.; Lux, S.E.; Nelson, W.J. Differential expression of na(+)-k(+)-atpase, ankyrin, fodrin, and e-cadherin along the kidney nephron. *Am. J. Physiol.* **1995**, *269*, C1417–C1432.
31. Sabolic, I.; Herak-Kramberger, C.M.; Breton, S.; Brown, D. Na/k-atpase in intercalated cells along the rat nephron revealed by antigen retrieval. *J. Am. Soc. Nephrol.* **1999**, *10*, 913–922.
32. Chen, Y.; Cann, M.J.; Litvin, T.N.; Iourgenko, V.; Sinclair, M.L.; Levin, L.R.; Buck, J. Soluble adenylyl cyclase as an evolutionarily conserved bicarbonate sensor. *Science* **2000**, *289*, 625–628.
33. Paunescu, T.G.; Da Silva, N.; Russo, L.M.; McKee, M.; Lu, H.A.; Breton, S.; Brown, D. Association of soluble adenylyl cyclase with the v-atpase in renal epithelial cells. *Am. J. Physiol. Renal Physiol.* **2008**, *294*, F130–F138.
34. Paunescu, T.G.; Ljubojevic, M.; Russo, L.M.; Winter, C.; McLaughlin, M.M.; Wagner, C.A.; Breton, S.; Brown, D. Camp stimulates apical v-atpase accumulation, microvillar elongation, and proton extrusion in kidney collecting duct a-intercalated cells. *Am. J. Physiol. Renal Physiol.* **2010**, *298*, F643–F654.
35. Bates, C.M.; Merenmies, J.M.; Kelly-Spratt, K.S.; Parada, L.F. Insulin receptor-related receptor expression in non-a intercalated cells in the kidney. *Kidney Int.* **1997**, *52*, 674–681.
36. Deyev, I.E.; Sohet, F.; Vassilenko, K.P.; Serova, O.V.; Popova, N.V.; Zozulya, S.A.; Burova, E.B.; Houillier, P.; Rzhevsky, D.I.; Berchatova, A.A.; *et al.* Insulin receptor-related receptor as an extracellular alkali sensor. *Cell Metab.* **2011**, *13*, 679–689.
37. Brown, D.; Wagner, C.A. Molecular mechanisms of acid-base sensing by the kidney. *J. Am. Soc. Nephrol.* **2012**, *23*, 774–780.
38. Royaux, I.E.; Wall, S.M.; Karniski, L.P.; Everett, L.A.; Suzuki, K.; Knepper, M.A.; Green, E.D. Pendrin, encoded by the pendred syndrome gene, resides in the apical region of renal intercalated cells and mediates bicarbonate secretion. *Proc. Natl. Acad. Sci. USA* **2001**, *98*, 4221–4226.
39. Schuster, V.L.; Stokes, J.B. Chloride transport by the cortical and outer medullary collecting duct. *Am. J. Physiol.* **1987**, *253*, F203–F212.
40. Wall, S.M.; Kim, Y.H.; Stanley, L.; Glapion, D.M.; Everett, L.A.; Green, E.D.; Verlander, J.W. Nacl restriction upregulates renal slc26a4 through subcellular redistribution: Role in cl- conservation. *Hypertension* **2004**, *44*, 982–987.
41. Jacques, T.; Picard, N.; Miller, R.L.; Riemondy, K.A.; Houillier, P.; Sohet, F.; Ramakrishnan, S.K.; Busst, C.J.; Jayat, M.; Corniere, N.; *et al.* Overexpression of pendrin in intercalated cells produces chloride-sensitive hypertension. *J. Am. Soc. Nephrol.* **2013**, *24*, 1104–1113.
42. Verlander, J.W.; Hassell, K.A.; Royaux, I.E.; Glapion, D.M.; Wang, M.E.; Everett, L.A.; Green, E.D.; Wall, S.M. Deoxycorticosterone upregulates pds (slc26a4) in mouse kidney: Role of pendrin in mineralocorticoid-induced hypertension. *Hypertension* **2003**, *42*, 356–362.
43. Pech, V.; Zheng, W.; Pham, T.D.; Verlander, J.W.; Wall, S.M. Angiotensin ii activates h+-atpase in type a intercalated cells. *J. Am. Soc. Nephrol.* **2008**, *19*, 84–91.
44. Terada, Y.; Knepper, M.A. Thiazide-sensitive nacl absorption in rat cortical collecting duct. *Am. J. Physiol.* **1990**, *259*, F519–F528.

45. Rubera, I.; Loffing, J.; Palmer, L.G.; Frindt, G.; Fowler-Jaeger, N.; Sauter, D.; Carroll, T.; McMahon, A.; Hummler, E.; Rossier, B.C. Collecting duct-specific gene inactivation of alphaenac in the mouse kidney does not impair sodium and potassium balance. *J. Clin. Invest.* **2003**, *112*, 554–565.
46. Gueutin, V.; Vallet, M.; Jayat, M.; Peti-Peterdi, J.; Corniere, N.; Leviel, F.; Sohet, F.; Wagner, C.A.; Eladari, D.; Chambrey, R. Renal beta-intercalated cells maintain body fluid and electrolyte balance. *J. Clin. Invest.* **2013**, *123*, 4219–4231.
47. Sebastian, A.; McSherry, E.; Morris, R.C., Jr. Impaired renal conservation of sodium and chloride during sustained correction of systemic acidosis in patients with type 1, classic renal tubular acidosis. *J. Clin. Invest.* **1976**, *58*, 454–469.
48. Edwards, J.C.; van Adelsberg, J.; Rater, M.; Herzlinger, D.; Lebowitz, J.; al-Awqati, Q. Conditional immortalization of bicarbonate-secreting intercalated cells from rabbit. *Am. J. Physiol.* **1992**, *263*, C521–C529.
49. van Adelsberg, J.; Edwards, J.C.; Takito, J.; Kiss, B.; al-Awqati, Q. An induced extracellular matrix protein reverses the polarity of band 3 in intercalated epithelial cells. *Cell* **1994**, *76*, 1053–1061.
50. Gao, X.; Eladari, D.; Leviel, F.; Tew, B.Y.; Miro-Julia, C.; Cheema, F.H.; Miller, L.; Nelson, R.; Paunescu, T.G.; McKee, M.; *et al.* Deletion of hensin/dmbt1 blocks conversion of beta- to alpha-intercalated cells and induces distal renal tubular acidosis. *Proc. Natl. Acad. Sci. USA* **2010**, *107*, 21872–21877.
51. Hikita, C.; Takito, J.; Vijayakumar, S.; Al-Awqati, Q. Only multimeric hensin located in the extracellular matrix can induce apical endocytosis and reverse the polarity of intercalated cells. *J. Biol. Chem.* **1999**, *274*, 17671–17676.
52. Hikita, C.; Vijayakumar, S.; Takito, J.; Erdjument-Bromage, H.; Tempst, P.; Al-Awqati, Q. Induction of terminal differentiation in epithelial cells requires polymerization of hensin by galectin 3. *J. Cell Biol.* **2000**, *151*, 1235–1246.
53. Watanabe, S.; Tsuruoka, S.; Vijayakumar, S.; Fischer, G.; Zhang, Y.; Fujimura, A.; Al-Awqati, Q.; Schwartz, G.J. Cyclosporin a produces distal renal tubular acidosis by blocking peptidyl prolyl cis-trans isomerase activity of cyclophilin. *Am. J. Physiol. Renal Physiol.* **2005**, *288*, F40–F47.
54. Liu, Y.; Pathak, N.; Kramer-Zucker, A.; Drummond, I.A. Notch signaling controls the differentiation of transporting epithelia and multiciliated cells in the zebrafish pronephros. *Development* **2007**, *134*, 1111–1122.
55. Jeong, H.W.; Jeon, U.S.; Koo, B.K.; Kim, W.Y.; Im, S.K.; Shin, J.; Cho, Y.; Kim, J.; Kong, Y.Y. Inactivation of notch signaling in the renal collecting duct causes nephrogenic diabetes insipidus in mice. *J. Clin. Invest.* **2009**, *119*, 3290–3300.
56. Hulander, M.; Kiernan, A.E.; Blomqvist, S.R.; Carlsson, P.; Samuelsson, E.J.; Johansson, B.R.; Steel, K.P.; Enerback, S. Lack of pendrin expression leads to deafness and expansion of the endolymphatic compartment in inner ears of foxi1 null mutant mice. *Development* **2003**, *130*, 2013–2025.
57. Blomqvist, S.R.; Vidarsson, H.; Fitzgerald, S.; Johansson, B.R.; Ollerstam, A.; Brown, R.; Persson, A.E.; Bergstrom, G.G.; Enerback, S. Distal renal tubular acidosis in mice that lack the forkhead transcription factor foxi1. *J. Clin. Invest.* **2004**, *113*, 1560–1570.

58. Kurth, I.; Hentschke, M.; Hentschke, S.; Borgmeyer, U.; Gal, A.; Hubner, C.A. The forkhead transcription factor foxi1 directly activates the ae4 promoter. *Biochem. J.* **2006**, *393*, 277–283.
59. Vidarsson, H.; Westergren, R.; Heglind, M.; Blomqvist, S.R.; Breton, S.; Enerback, S. The forkhead transcription factor foxi1 is a master regulator of vacuolar h-atpase proton pump subunits in the inner ear, kidney and epididymis. *PLoS One* **2009**, *4*, e4471.
60. Fejes-Toth, G.; Naray-Fejes-Toth, A. Differentiation of renal beta-intercalated cells to alpha-intercalated and principal cells in culture. *Proc. Natl. Acad. Sci. USA* **1992**, *89*, 5487–5491.
61. Wallin, L.; Alling, C.; Aurell, M. Impairment of renal function in patients on long-term lithium treatment. *Clin. Nephrol.* **1982**, *18*, 23–28.
62. Kortenoeven, M.L.; Li, Y.; Shaw, S.; Gaeggeler, H.P.; Rossier, B.C.; Wetzels, J.F.; Deen, P.M. Amiloride blocks lithium entry through the sodium channel thereby attenuating the resultant nephrogenic diabetes insipidus. *Kidney Int.* **2009**, *76*, 44–53.
63. de Groot, T.; Alsady, M.; Jaklofsky, M.; Otte-Holler, I.; Baumgarten, R.; Giles, R.H.; Deen, P.M. Lithium causes g2 arrest of renal principal cells. *J. Am. Soc. Nephrol.* **2014**, *25*, 501–510.
64. Trepiccione, F.; Capasso, G.; Nielsen, S.; Christensen, B.M. Evaluation of cellular plasticity in the collecting duct during recovery from lithium-induced nephrogenic diabetes insipidus. *Am. J. Physiol. Renal Physiol.* **2013**, *305*, F919–F929.
65. Wall, S.M.; Pech, V. The interaction of pendrin and the epithelial sodium channel in blood pressure regulation. *Curr. Opin. Nephrol. Hypertens.* **2008**, *17*, 18–24.
66. Thumova, M.; Pech, V.; Froehlich, O.; Agazatian, D.; Wang, X.; Verlander, J.W.; Kim, Y.H.; Wall, S.M. Pendrin protein abundance in the kidney is regulated by nitric oxide and camp. *Am. J. Physiol. Renal Physiol.* **2012**, *303*, F812–F820.
67. DuBose, T.D., Jr.; Caflisch, C.R. Effect of selective aldosterone deficiency on acidification in nephron segments of the rat inner medulla. *J. Clin. Invest.* **1988**, *82*, 1624–1632.
68. Garg, L.C.; Narang, N. Effects of aldosterone on nem-sensitive atpase in rabbit nephron segments. *Kidney Int.* **1988**, *34*, 13–17.
69. Hays, S.R. Mineralocorticoid modulation of apical and basolateral membrane h+/oh-/hco3- transport processes in the rabbit inner stripe of outer medullary collecting duct. *J. Clin. Invest.* **1992**, *90*, 180–187.
70. Khadouri, C.; Marsy, S.; Barlet-Bas, C.; Doucet, A. Short-term effect of aldosterone on nem-sensitive atpase in rat collecting tubule. *Am. J. Physiol.* **1989**, *257*, F177–F181.
71. McKinney, T.D.; Davidson, K.K. Bicarbonate transport in collecting tubules from outer stripe of outer medulla of rabbit kidneys. *Am. J. Physiol.* **1987**, *253*, F816–F822.
72. Mujais, S.K. Effects of aldosterone on rat collecting tubule n-ethylmaleimide-sensitive adenosine triphosphatase. *J. Lab. Clin. Med.* **1987**, *109*, 34–39.
73. Wagner, C.A.; Mohebbi, N.; Uhlig, U.; Giebisch, G.H.; Breton, S.; Brown, D.; Geibel, J.P. Angiotensin ii stimulates h(+)-atpase activity in intercalated cells from isolated mouse connecting tubules and cortical collecting ducts. *Cell. Physiol. Biochem.* **2011**, *28*, 513–520.
74. Rothenberger, F.; Velic, A.; Stehberger, P.A.; Kovacikova, J.; Wagner, C.A. Angiotensin ii stimulates vacuolar h+-atpase activity in renal acid-secretory intercalated cells from the outer medullary collecting duct. *J. Am. Soc. Nephrol.* **2007**, *18*, 2085–2093.

75. Winter, C.; Kampik, N.B.; Vedovelli, L.; Rothenberger, F.; Paunescu, T.G.; Stehberger, P.A.; Brown, D.; John, H.; Wagner, C.A. Aldosterone stimulates vacuolar h(+)-atpase activity in renal acid-secretory intercalated cells mainly via a protein kinase c-dependent pathway. *Am. J. Physiol. Cell Physiol.* **2011**, *301*, C1251–C1261.
76. Lu, X.; Garrelds, I.M.; Wagner, C.A.; Danser, A.H.; Meima, M.E. (Pro)renin receptor is required for prorenin-dependent and -independent regulation of vacuolar h(+)-atpase activity in mdck.C11 collecting duct cells. *Am. J. Physiol. Renal Physiol.* **2013**, *305*, F417–F425.
77. Mohebbi, N.; Perna, A.; van der Wijst, J.; Becker, H.M.; Capasso, G.; Wagner, C.A. Regulation of two renal chloride transporters, ae1 and pendrin, by electrolytes and aldosterone. *PLoS One* **2013**, *8*, e55286.
78. Lifton, R.P.; Gharavi, A.G.; Geller, D.S. Molecular mechanisms of human hypertension. *Cell* **2001**, *104*, 545–556.
79. Shibata, S.; Rinehart, J.; Zhang, J.; Moeckel, G.; Castaneda-Bueno, M.; Stiegler, A.L.; Boggon, T.J.; Gamba, G.; Lifton, R.P. Mineralocorticoid receptor phosphorylation regulates ligand binding and renal response to volume depletion and hyperkalemia. *Cell Metab.* **2013**, *18*, 660–671.
80. Eladari, D.; Chambrey, R.; Peti-Peterdi, J. A new look at electrolyte transport in the distal tubule. *Annu. Rev. Physiol.* **2012**, *74*, 325–349.
81. Rieg, T.; Bundey, R.A.; Chen, Y.; Deschenes, G.; Junger, W.; Insel, P.A.; Vallon, V. Mice lacking p2y2 receptors have salt-resistant hypertension and facilitated renal na+ and water reabsorption. *FASEB J.* **2007**, *21*, 3717–3726.
82. McCulloch, F.; Chambrey, R.; Eladari, D.; Peti-Peterdi, J. Localization of connexin 30 in the luminal membrane of cells in the distal nephron. *Am. J. Physiol. Renal Physiol.* **2005**, *289*, F1304–F1312.
83. Lu, M.; MacGregor, G.G.; Wang, W.; Giebisch, G. Extracellular atp inhibits the small-conductance k channel on the apical membrane of the cortical collecting duct from mouse kidney. *J. Gen. Physiol.* **2000**, *116*, 299–310.
84. Holtzclaw, J.D.; Cornelius, R.J.; Hatcher, L.I.; Sansom, S.C. Coupled atp and potassium efflux from intercalated cells. *Am. J. Physiol. Renal Physiol.* **2011**, *300*, F1319–F1326.
85. Peti-Peterdi, J. High glucose and renin release: The role of succinate and gpr91. *Kidney Int.* **2010**, *78*, 1214–1217.
86. Tokonami, N.; Morla, L.; Centeno, G.; Mordasini, D.; Ramakrishnan, S.K.; Nikolaeva, S.; Wagner, C.A.; Bonny, O.; Houillier, P.; Doucet, A.; *et al.* Alpha-ketoglutarate regulates acid-base balance through an intrarenal paracrine mechanism. *J. Clin. Invest.* **2013**, *123*, 3166–3171.
87. Bhoola, K.D.; Figueroa, C.D.; Worthy, K. Bioregulation of kinins: Kallikreins, kininogens, and kininases. *Pharmacol. Rev.* **1992**, *44*, 1–80.
88. Figueroa, C.D.; Gonzalez, C.B.; Grigoriev, S.; Abd Alla, S.A.; Haasemann, M.; Jarnagin, K.; Muller-Esterl, W. Probing for the bradykinin b2 receptor in rat kidney by anti-peptide and anti-ligand antibodies. *J. Histochem. Cytochem.* **1995**, *43*, 137–148.
89. Boedtkjer, E.; Aalkjaer, C. Disturbed acid-base transport: An emerging cause of hypertension. *Front. Physiol.* **2013**, *4*, 388.
90. Alper, S.L. Familial renal tubular acidosis. *J. Nephrol.* **2010**, *23* (Suppl. S16), S57–S76.

91. Stehberger, P.A.; Shmukler, B.E.; Stuart-Tilley, A.K.; Peters, L.L.; Alper, S.L.; Wagner, C.A. Distal renal tubular acidosis in mice lacking the ae1 (band3) cl-/hco3- exchanger (slc4a1). *J. Am. Soc. Nephrol.* **2007**, *18*, 1408–1418.
92. Fry, A.C.; Karet, F.E. Inherited renal acidoses. *Physiology (Bethesda)* **2007**, *22*, 202–211.
93. Dou, H.; Finberg, K.; Cardell, E.L.; Lifton, R.; Choo, D. Mice lacking the b1 subunit of h+ -atpase have normal hearing. *Hear. Res.* **2003**, *180*, 76–84.
94. Finberg, K.E.; Wagner, C.A.; Bailey, M.A.; Paunescu, T.G.; Breton, S.; Brown, D.; Giebisch, G.; Geibel, J.P.; Lifton, R.P. The b1-subunit of the h(+) atpase is required for maximal urinary acidification. *Proc. Natl. Acad. Sci. USA* **2005**, *102*, 13616–13621.
95. Karet, F.E. Inherited distal renal tubular acidosis. *J. Am. Soc. Nephrol.* **2002**, *13*, 2178–2184.
96. Hennings, J.C.; Picard, N.; Huebner, A.K.; Stauber, T.; Maier, H.; Brown, D.; Jentsch, T.J.; Vargas-Poussou, R.; Eladari, D.; Hubner, C.A. A mouse model for distal renal tubular acidosis reveals a previously unrecognized role of the v-atpase a4 subunit in the proximal tubule. *EMBO Mol. Med.* **2012**, *4*, 1057–1071.
97. Norgett, E.E.; Golder, Z.J.; Lorente-Canovas, B.; Ingham, N.; Steel, K.P.; Karet Frankl, F.E. Atp6v0a4 knockout mouse is a model of distal renal tubular acidosis with hearing loss, with additional extrarenal phenotype. *Proc. Natl. Acad. Sci. USA* **2012**, *109*, 13775–13780.
98. Vainsel, M.; Fondu, P.; Cadranel, S.; Rocmans, C.; Gepts, W. Osteopetrosis associated with proximal and distal tubular acidosis. *Acta Paediatr. Scand.* **1972**, *61*, 429–434.
99. Whyte, M.P.; Murphy, W.A.; Fallon, M.D.; Sly, W.S.; Teitelbaum, S.L.; McAlister, W.H.; Avioli, L.V. Osteopetrosis, renal tubular acidosis and basal ganglia calcification in three sisters. *Am. J. Med.* **1980**, *69*, 64–74.
100. Zackai, E.H.; Sly, W.S.; McAlister, W.G. Microcephaly, mild mental retardation, short stature, and skeletal anomalies in siblings. *Am. J. Dis. Child.* **1972**, *124*, 111–115.
101. Lewis, S.E.; Erickson, R.P.; Barnett, L.B.; Venta, P.J.; Tashian, R.E. N-ethyl-n-nitrosourea-induced null mutation at the mouse car-2 locus: An animal model for human carbonic anhydrase ii deficiency syndrome. *Proc. Natl. Acad. Sci. USA* **1988**, *85*, 1962–1966.
102. Everett, L.A.; Glaser, B.; Beck, J.C.; Idol, J.R.; Buchs, A.; Heyman, M.; Adawi, F.; Hazani, E.; Nassir, E.; Baxevanis, A.D.; *et al.* Pendred syndrome is caused by mutations in a putative sulphate transporter gene (pds). *Nat. Genet.* **1997**, *17*, 411–422.
103. Nakaya, K.; Harbidge, D.G.; Wangemann, P.; Schultz, B.D.; Green, E.D.; Wall, S.M.; Marcus, D.C. Lack of pendrin hco3- transport elevates vestibular endolymphatic [ca2+] by inhibition of acid-sensitive trpv5 and trpv6 channels. *Am. J. Physiol. Renal Physiol.* **2007**, *292*, F1314–F1321.
104. Escobar, L.; Mejia, N.; Gil, H.; Santos, F. Distal renal tubular acidosis: A hereditary disease with an inadequate urinary h(+) excretion. *Nefrologia* **2013**, *33*, 289–296.
105. Alexander, R.T.; Dimke, H.; Cordat, E. Proximal tubular nhes: Sodium, protons and calcium? *Am. J. Physiol. Renal Physiol.* **2013**, *305*, F229–F236.
106. Borthwick, K.J.; Kandemir, N.; Topaloglu, R.; Kornak, U.; Bakkaloglu, A.; Yordam, N.; Ozen, S.; Mocan, H.; Shah, G.N.; Sly, W.S.; *et al.* A phenocopy of caii deficiency: A novel genetic explanation for inherited infantile osteopetrosis with distal renal tubular acidosis. *J. Med. Genet.* **2003**, *40*, 115–121.

107. Cordat, E.; Kittanakom, S.; Yenchitsomanus, P.T.; Li, J.; Du, K.; Lukacs, G.L.; Reithmeier, R.A. Dominant and recessive distal renal tubular acidosis mutations of kidney anion exchanger 1 induce distinct trafficking defects in mdck cells. *Traffic* **2006**, *7*, 117–128.
108. Devonald, M.A.; Smith, A.N.; Poon, J.P.; Ihrke, G.; Karet, F.E. Non-polarized targeting of ae1 causes autosomal dominant distal renal tubular acidosis. *Nat. Genet.* **2003**, *33*, 125–127.
109. Toye, A.M.; Banting, G.; Tanner, M.J. Regions of human kidney anion exchanger 1 (kae1) required for basolateral targeting of kae1 in polarised kidney cells: Mis-targeting explains dominant renal tubular acidosis (drta). *J. Cell Sci.* **2004**, *117*, 1399–1410.
110. Quilty, J.A.; Li, J.; Reithmeier, R.A. Impaired trafficking of distal renal tubular acidosis mutants of the human kidney anion exchanger kae1. *Am. J. Physiol. Renal Physiol.* **2002**, *282*, F810–F820.
111. Cordat, E.; Reithmeier, R.A. Expression and interaction of two compound heterozygous distal renal tubular acidosis mutants of kidney anion exchanger 1 in epithelial cells. *Am. J. Physiol. Renal Physiol.* **2006**, *291*, F1354–F1361.
112. Quilty, J.A.; Cordat, E.; Reithmeier, R.A. Impaired trafficking of human kidney anion exchanger (kae1) caused by hetero-oligomer formation with a truncated mutant associated with distal renal tubular acidosis. *Biochem. J.* **2002**, *368*, 895–903.
113. Caruana, R.J.; Barish, C.F.; Buckalew, V.M., Jr. Complete distal renal tubular acidosis in systemic lupus: Clinical and laboratory findings. *Am. J. Kidney Dis.* **1985**, *6*, 59–63.
114. Rodriguez Soriano, J. Renal tubular acidosis: The clinical entity. *J. Am. Soc. Nephrol.* **2002**, *13*, 2160–2170.
115. Karet, F.E.; Finberg, K.E.; Nayir, A.; Bakkaloglu, A.; Ozen, S.; Hulton, S.A.; Sanjad, S.A.; Al-Sabban, E.A.; Medina, J.F.; Lifton, R.P. Localization of a gene for autosomal recessive distal renal tubular acidosis with normal hearing (rdrta2) to 7q33–34. *Am. J. Hum. Genet.* **1999**, *65*, 1656–1665.
116. Stover, E.H.; Borthwick, K.J.; Bavalia, C.; Eady, N.; Fritz, D.M.; Rungroj, N.; Giersch, A.B.; Morton, C.C.; Axon, P.R.; Akil, I.; *et al.* Novel atp6v1b1 and atp6v0a4 mutations in autosomal recessive distal renal tubular acidosis with new evidence for hearing loss. *J. Med. Genet.* **2002**, *39*, 796–803.
117. Paunescu, T.G.; Russo, L.M.; Da Silva, N.; Kovacikova, J.; Mohebbi, N.; Van Hoek, A.N.; McKee, M.; Wagner, C.A.; Breton, S.; Brown, D. Compensatory membrane expression of the v-atpase b2 subunit isoform in renal medullary intercalated cells of b1-deficient mice. *Am. J. Physiol. Renal Physiol.* **2007**, *293*, F1915–F1926.
118. Lorente-Canovas, B.; Ingham, N.; Norgett, E.E.; Golder, Z.J.; Karet Frankl, F.E.; Steel, K.P. Mice deficient in h+-atpase a4 subunit have severe hearing impairment associated with enlarged endolymphatic compartments within the inner ear. *Dis. Model. Mech.* **2013**, *6*, 434–442.
119. Paunescu, T.G.; Rodriguez, S.; Benz, E.; McKee, M.; Tyszkowski, R.; Albers, M.W.; Brown, D. Loss of the v-atpase b1 subunit isoform expressed in non-neuronal cells of the mouse olfactory epithelium impairs olfactory function. *PLoS One* **2012**, *7*, e45395.
120. Peters, L.L.; Shivdasani, R.A.; Liu, S.C.; Hanspal, M.; John, K.M.; Gonzalez, J.M.; Brugnara, C.; Gwynn, B.; Mohandas, N.; Alper, S.L.; *et al.* Anion exchanger 1 (band 3) is required to prevent erythrocyte membrane surface loss but not to form the membrane skeleton. *Cell* **1996**, *86*, 917–927.

121. Southgate, C.D.; Chishti, A.H.; Mitchell, B.; Yi, S.J.; Palek, J. Targeted disruption of the murine erythroid band 3 gene results in spherocytosis and severe haemolytic anaemia despite a normal membrane skeleton. *Nat. Genet.* **1996**, *14*, 227–230.
122. Sun, X.; Soleimani, M.; Petrovic, S. Decreased expression of slc26a4 (pendrin) and slc26a7 in the kidneys of carbonic anhydrase ii-deficient mice. *Cell. Physiol. Biochem.* **2008**, *21*, 95–108.
123. Pela, I.; Bigozzi, M.; Bianchi, B. Profound hypokalemia and hypochloremic metabolic alkalosis during thiazide therapy in a child with pendred syndrome. *Clin. Nephrol.* **2008**, *69*, 450–453.
124. Kandasamy, N.; Fugazzola, L.; Evans, M.; Chatterjee, K.; Karet, F. Life-threatening metabolic alkalosis in pendred syndrome. *Eur. J. Endocrinol.* **2011**, *165*, 167–170.
125. Kim, Y.H.; Pech, V.; Spencer, K.B.; Beierwaltes, W.H.; Everett, L.A.; Green, E.D.; Shin, W.; Verlander, J.W.; Sutliff, R.L.; Wall, S.M. Reduced enac protein abundance contributes to the lower blood pressure observed in pendrin-null mice. *Am. J. Physiol. Renal Physiol.* **2007**, *293*, F1314–F1324.
126. Xu, J.; Barone, S.; Brooks, M.B.; Soleimani, M. Double knockout of carbonic anhydrase ii (caii) and na-cl(-) cotransporter (ncc) causes salt wasting and volume depletion. *Cell. Physiol. Biochem.* **2013**, *32*, 173–183.
127. Soleimani, M.; Barone, S.; Xu, J.; Shull, G.E.; Siddiqui, F.; Zahedi, K.; Amlal, H. Double knockout of pendrin and na-cl cotransporter (ncc) causes severe salt wasting, volume depletion, and renal failure. *Proc. Natl. Acad. Sci. USA* **2012**, *109*, 13368–13373.
128. Kokubo, Y.; Tomoike, H.; Tanaka, C.; Banno, M.; Okuda, T.; Inamoto, N.; Kamide, K.; Kawano, Y.; Miyata, T. Association of sixty-one non-synonymous polymorphisms in forty-one hypertension candidate genes with blood pressure variation and hypertension. *Hypertens. Res.* **2006**, *29*, 611–619.
129. Le Moellic, C.; Boulkroun, S.; Gonzalez-Nunez, D.; Dublineau, I.; Cluzeaud, F.; Fay, M.; Blot-Chabaud, M.; Farman, N. Aldosterone and tight junctions: Modulation of claudin-4 phosphorylation in renal collecting duct cells. *Am. J. Physiol. Cell Physiol.* **2005**, *289*, C1513–C1521.