processes

MDPI

Article

An Improved Method of Model-Free Adaptive Predictive Control: A Case of pH Neutralization in WWTP

Jufeng Li [1], Zhihe Tang [1], Hui Luan [1], Zhongyao Liu [2], Baochang Xu [2], Zhongjun Wang [2] and Wei He [1,*]

[1] HSE Testing Center, CNPC Research Institute of Safety and Environmental Technology, Beijing 102206, China; ljf69@petrochina.com.cn (J.L.); luanhui@cnpc.com.cn (H.L.)
[2] College of Information Science and Engineering, China University of Petroleum, Beijing 102249, China; liuzy0308@163.com (Z.L.); xbcyl@cup.edu.cn (B.X.); wangzj_cup@163.com (Z.W.)
* Correspondence: he-wei@cnpc.com.cn

Abstract: pH neutralization reaction process plays a crucial role in Waste Water Treatment Process (WWTP). Traditional PID Proportion Integral Differential, (or even advanced PID control) algorithms have poor performance on WWTP due to the strong non-linearity, large time lag, and large inertia characteristics of pH neutralization. Therefore, finding a superior control method to maintain the pH value of wastewater within the normal range will greatly help to improve the efficiency and effectiveness of wastewater treatment. The chemical reaction mechanism of pH neutralization reaction process is first analyzed, and a mechanistic model of pH neutralization reaction process is developed based on the reaction of ions during acid-alkali neutralization and the electric balance equation. Then, combining the characteristics of generalized predictive control and Model-Free Adaptive Control (MFAC), a Model-Free Adaptive Predictive Control (MFAPC) method based on compact format dynamic linearization is introduced. An Improved Model Free Adaptive PI Predictive Control algorithm (IMFAPC) with proportional (P) and integral (I) algorithms is proposed to further improve the control performance. IMFAPC is proposed on the basis of MFAPC, combining the advantages of generalized predictive control, introducing a PI module consisting of error and error sum, and predicting the PI module, making it possible to produce more accurate constraints on the control inputs, avoiding increasing errors, and improving the control effect of delayed systems at the same time. pH neutralization process simulation experimental results show that compared with the ordinary Model-Free Adaptive Control (MFAC) and MFAPC, the IMFAPC control algorithms has the best performance in terms of accuracy, overshoot, and the robustness.

Keywords: pH control; nonlinear; time-delay; model-free adaptive predictive control; robustness

check for updates

Citation: Li, J.; Tang, Z.; Luan, H.; Liu, Z.; Xu, B.; Wang, Z.; He, W. An Improved Method of Model-Free Adaptive Predictive Control: A Case of pH Neutralization in WWTP. *Processes* **2023**, *11*, 1448. https://doi.org/10.3390/pr11051448

Academic Editors: Farshid Torabi and Sabeti Morteza

Received: 4 April 2023
Revised: 3 May 2023
Accepted: 8 May 2023
Published: 10 May 2023

1. Introduction

Due to the increase in the consumption of limited drinking water resources and excessive pollution in the world, the shortage of fresh water has become one of the most urgent global problems facing the sustainable development of human society in the 21st century. To mitigate this global crisis, several effective approaches have been considered, including rainwater harvesting, the water cycle, and desalination [1]. With the rapid development of urban modernization, the demand for water resources in industry and daily life is increasing, resulting in a sharp increase in industrial wastewater and domestic sewage. As a stable freshwater resource, urban wastewater recycling can effectively alleviate the pressure of social demand for water resources and protect water resources from repollution. In order to fully recycle water resources and protect the ecological environment, wastewater treatment plays an indispensable role [2].

pH control is widely used in wastewater treatment, chemical production, pharmaceutical, printing and dyeing and paper making and other industrial processes, pH value for improving the safety protection of production equipment and environmental protection

also has an extremely important impact [3–6]. In the process of wastewater treatment, pH neutralization reaction is an extremely important part, pH value is not only related to whether wastewater treatment can meet the national discharge standards, but also affect the treatment effect of the subsequent process of wastewater treatment, but also may lead to a large waste of resources due to inaccurate control. Therefore, the study of value control in sewage treatment is of great significance.

The acid-alkali titration curve of typical pH values (Figure 1) is highly nonlinear, and the neutralization reaction is generally carried out in large containers and circulating pipelines, making the system response highly time-delayed. It can be seen from the figure that when the pH value is low or high, the change is very slow, as shown in points a and b. When the pH value is about 7, a slight change in the neutralizer added causes a significant change in the pH value, as shown in point c.

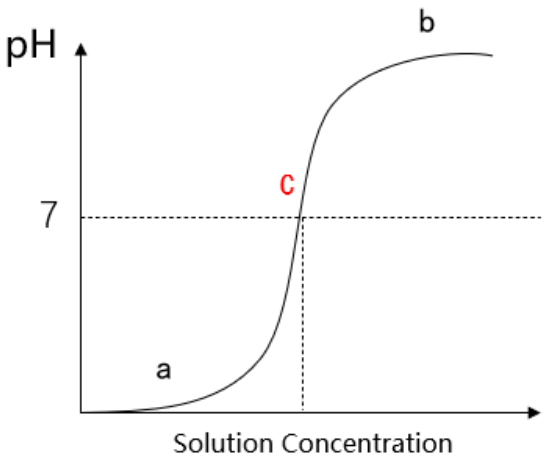

Figure 1. pH neutralization titration curve.

Because of the strong nonlinearity and large time lag characteristics of the pH neutralization process, the control of pH is considered one of the most difficult problems in the field of process control due to its high nonlinearity [7–11].

Since the topic was introduced, the control methods of pH neutralization process mainly include traditional PID control methods and modern control methods, and intelligent control methods. In the process of pH neutralization, it is hard to achieve satisfied control effect of traditional PID control in the actual process because the parameters of PID controller are difficult to adjust.

The traditional PID control method to achieve superior pH control in neutralization is the incremental three-stage nonlinear variable-gain PID control, which can overcome the influence of time-delay and serious nonlinearity in the neutralization response to a certain extent. However, this method has many difficulties in the subsection, and it is still difficult to achieve effective control when the subsection is not divided properly and constitutes a considerable investment. Therefore, more advanced controllers are needed to deal with nonlinearities. It can be seen that it is difficult for traditional PID control methods to achieve satisfactory control effects for this kind of system with parameter uncertainty [12].

With the widespread application of modern control theory and computer technology, there have been some effective control methods for pH neutralization process control, such as adaptive control [13], nonlinear model predictive controller [14], fuzzy control through neural approch control [15] etc. Nonlinear Internal Model Control(IMC) controller was applied by Kulkarni et al. to the single-input single-output (SISO) system with strong acid-alkali reaction [16]. An adaptive nonlinear control strategy for pH neutralization was developed by Henson et al. and applied and tested in a partial pilot-scale neutralization process [13]. Alama et al. identified the mechanism model of pH neutralization process as the Wiener structural model, and designed a nonlinear model prediction controller accordingly. The simulation results show that the performance of the controller is better

than that of the general model prediction controller [17]. A Wiener model controller is designed by Tan et al using computational intelligence technology to adjust the pH value of weak acid and strong alkali neutralization process. Using Genetic Algorithm (GA) and simulation data, they successfully defined the parameters associated with back titration. They used the multi-objective evolutionary algorithm (Moea) to determine the PID controller parameters used to adjust the linearized pH system. The experimental results show that the parameters of Wiener model controller developed by GA/MOEA can adjust the pH value with a large range with a minimum overshoot [18]. Amin et al. proposed a new nonlinear Hammerstein model control algorithm and extended it to some special Hammerstein systems. This control scheme not only has good control response, but also has good stability and robustness [19]. Mwembeshi et al. designed a Linear Internal Model Control (GAIMC) based on Genetic Algorithm (GA) for pH Control, and used the assumptions of first-order and second-order transfer function models, GAIMC and traditional Ziegler Nichols tuning PI controller are compared [20]. Generalized predictive control has many successful applications in the literature [21–24]. Based on the T-S fuzzy model, Kuo et al. designed a multi-model predictive controller for multivariate pH neutralization process. This approach needs to consider the choice of fixed model. If too few models are selected, the performance of the controller will not be ideal. However, if there are too many choices, when designing the controller for each model, the predictive control law needs to be solved online, which will inevitably cause a large computational burden, resulting in frequent model switching that will degrade the performance of the controller [25].

Although the above control methods have been successfully applied to the actual system, they all rely on the accurate model of pH neutralization process, as we all know, the control object is becoming more and more complex, it is not easy to establish an accurate mathematical model of the controlled system, and the actual production process requires rich experience to debug the model, and the theoretical analysis is also difficult, making the establishment of the model sometimes even more difficult than the control itself. Adaptive control and predictive control are control theories and methods based on the accurate mathematical model of the controlled system, which have a strong dependence on the model quality of the control system, and can achieve good control under a single working condition or little change in the model [26,27]. pH neutralization process is highly nonlinear, and when the target parameters change over a large range, it is difficult for a fixed-model-based controller to obtain good control results, so it has limitations in practical applications.

Fuzzy control is independent of the precise mathematical model and has a high robustness, in fact, when adjusting the control quantity according to the predicted output and fuzzy decision, the fuzzy decision should be based on the predicted value of the output at many future moments because the applied control has an impact on the output at many moments in the future. However, when using traditional fuzzy control strategies to process multiple input information, how to use fuzzy rules to describe the complex and changeable operation behavior of controllers is a challenging problem.

Model-Free Adaptive Control (MFAC) was first proposed in 1994 and is widely used for generally unknown discrete-time nonlinear systems. The basic idea is to use the newly introduced pseudo-gradient vector (Pseudo-Partial-Derivative, PPD, or pseudo-Jacobi matrix) and the pseudo-order, replacing the general discrete-time nonlinear system with a series of dynamic linear time-varying models (compact-format, partial-format, and full-format linearized models) in the vicinity of the controlled system trajectory. And the system pseudo-gradient vector is estimated online using only the controlled system I/O data to achieve model-free control of the nonlinear system. The advantage of MFAC is that the design, analysis, and operation of the control system can be carried out without the need for the mechanism model and parameter analysis model of the controlled system in adaptive control, and no identification modeling is required [28–31]. With a simple design, low computational burden, and strong robustness to external disturbances, it can achieve good control effects in large hysteresis, coupling, strong nonlinearity, variable structure, variable gain, etc., which are difficult to be controlled by conventional PID controllers and more

advanced controllers. It has been successfully applied to refining, chemical, electric power, light industry, and other fields and the study of urban expressway traffic inflow ramp control [32–38].

Model-Free Adaptive Predictive Control(MFAPC) method is a combination of Model-Free Adaptive Control (MFAC) [39–43] and predictive control. Its main advantages are: the controller design only relies on input and output data, independent of model information and prior knowledge of controlled processes, so it can effectively avoid unmodeled dynamic problems under the MFAPC framework, which is very suitable for the actual control of complex industrial processes such as wastewater treatment plants studied in this paper. MFAPC has also been widely used [44–46]. At present, the existing MFAPC algorithms do not consider the effect of the output tracking error on the controller performance when designing the controller. However, ignoring the strong tracking error of each sampling time has a great influence on the control system, so the control precision of the traditional MFAPC method is conservative to some extent, for pH neutralization process with strong nonlinearity and large time delay, the control effect is less than ideal. Therefore, this paper proposed a method based on a compact-format linearized SISO nonlinear discrete-time system, combining the features of generalized predictive control with MFAPC, and applied it to the control of pH value. The main contributions of this paper are summarized as follows:

(1) In order to simulate pH neutralization system in the wastewater treatment process, a representative and extremely challenging general mathematical model is chosen.
(2) To solve the strong nonlinearity and large time lag characteristics of pH neutralization system in the wastewater treatment process, the dynamic linearization method of a nonlinear system is described, on this basis, the Model-Free Adaptive Predictive Control (MFAPC) algorithm is introduced, the estimation of pseudo-partial derivatives and the prediction of multi-layer step-by-step prediction algorithms are introduced, and finally, the design of the Model-Free Adaptive Prediction Controller is introduced.
(3) To make the calculated input values more accurate, the error and error sum as PI module are introduced to implement the Improved Model-Free Adaptive Predictive Control, (IMFAPC), by combining the advantages of the generalized forecasting algorithm.
(4) Due to the existence of pure lag links such as mixing and measurement in pH neutralization process, the overshoot phenomenon occurs. In order to verify the control effect of IMFAPC, it is compared with the ordinary MFAC and MFAPC in a theoretical type simulation. The experimental results show that the IMFAPC overcomes the overshoot phenomenon, has the best performance in terms of overshoot, accuracy, and the robustness.

2. Analysis and Modeling of pH Neutralization Reaction Process

Since pH neutralization process in the actual production process is undoubtedly complicated, many scholars at home and abroad have made various attempts and conducted research on the modeling and control of pH since the topic was proposed. The mathematical models in this paper are chosen to be representative and very difficult to control generic models. The model was first proposed by McAvoy in 1972 and is premised on the assumption that in a continuously stirred reactor—CSTR (Continuously Stirred Tank Reactor) [47]—the model is divided into two parts: a dynamic model to describe the dynamics of the concentration of chemical components in the CSTR and a static nonlinear model to describe the chemical equilibrium of the chemical components. The experimental results verified that the model can describe pH neutralization process well, and the model laid the theoretical foundation for the research of pH control problem.

The pH value is the definition of the acidity of the solution in the acid-alkali neutralization reaction. The neutralization reaction process is a mixture of the acid solution, alkali solution, and buffer in a fixed volume container, and the acid-alkali neutralization reaction process is described in Figure 2.

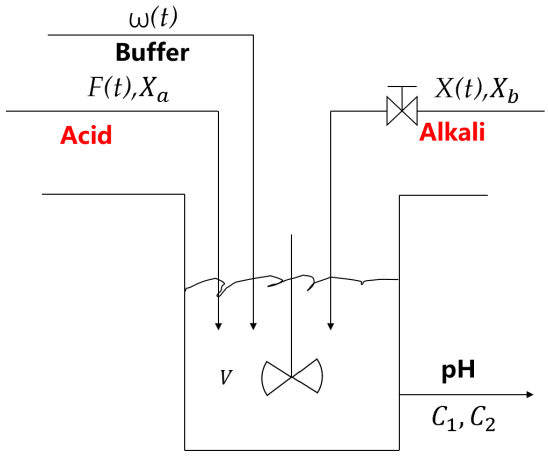

Figure 2. pH neutralization reaction schematic.

In the figure: $F(t)$— the flow rate of incoming acid, maintain stable, L/min; $U(t)$—the flow rate of incoming alkali, control variable, L/min; X_a—the concentration of incoming acid, mol/L; X_b—the concentration of incoming alkali, mol/L; C_1—the total concentration of effluent acid, mol/L; C_2—the total concentration of effluent alkali, mol/L; V-reactor volume, L; ω_t, system noise signal. If strong acid and alkali are completely ionized:

$$C_1 = [H^+], C_2 = [OH^-] \tag{1}$$

The total amount of acid in the solution flowing out of the container is

$$Q_1 = [F(t) + U(t)]C_1 \tag{2}$$

The total amount of acid flowing into the container is

$$Q_2 = F(t)X_a \tag{3}$$

The amount of change in the total acid in the container is

$$V\frac{dC_1}{dt} \tag{4}$$

Then, the difference between the total amount of acid in the incoming solution and the total amount of acid in the outgoing solution is the total change in acid in the vessel:

$$V\frac{dC_1}{dt} = F(t)X_a - [F(t) + U(t)]C_1 \tag{5}$$

The static equation is obtained from the ionization equilibrium

$$\sum_{i=1}^{n} a_i([H^+])x_i + 10^{-pH} - 10^{-pH-14} = 0 \tag{6}$$

For monomeric strong acid and strong alkali systems

$$ai([H^+]) = 1 \tag{7}$$

The titration equation is

$$C_1 - C_2 = 10^{-ph} - 10^{ph-14} \tag{8}$$

We can make

$$Y(t) = C_1 - C_2 \tag{9}$$

Then

$$Y_{(t)} = 10^{-pH} - 10^{pH-14} * K_W \tag{10}$$

$$V\frac{dy}{dt} = (Xa - y)F(t) - (Xb + y)U(t) \tag{11}$$

Then

$$pH(K) = \lg \frac{-y(k) + \sqrt{y(k)^2 + 4Kw}}{2Kw} \tag{12}$$

The approximate discretization model of the above equation is

$$y(k+1) = \left(1 - \frac{T}{V}F(k)\right)y(k) - \frac{TX_b}{V}U(k) - \frac{T}{V}y(k)U(k) + \frac{TXa}{V}F(k) \tag{13}$$

The conversion from $y(k)$ to $pH(k)$ leads to severe nonlinearity. However, the above describes the fast strong acid and strong alkali reaction, while in the actual process, there is a certain inertia and time lag due to factors such as circulating pipelines. Therefore, the inertial time lag link must be added to the original model to improve it.

The improved object structure diagram is shown in Figure 3. Finally, we can obtain:

$$u(k) = \exp\left(-\frac{T}{Tp}\right)u(k-1) + \left(1 - \exp\left(-\frac{T}{Tp}\right)\right)x(k-d-1) \tag{14}$$

$$\begin{aligned} y(k) = \left(1 - \frac{T}{V}F(k)\right)y(k-1) - \frac{XbT}{V}x(k-1) - \\ \frac{T}{V}y(k-1)x(k-1) + \frac{XaT}{V}F(k) + w(k) \end{aligned} \tag{15}$$

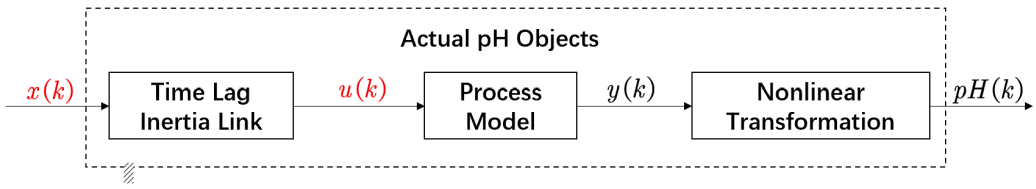

Figure 3. Object Structure Diagram. $u(k)$—output of time lag inertia link; T_p—inertia time; d—time lag steps.

3. Model-Free Adaptive Predictive Control Algorithm Design

The basic theory of the MFAPC scheme based on compact form dynamic linearization (CFDL) and the Model-Free Adaptive PI Predictive Control algorithm based on MFAPC theory is presented below.

3.1. Model-Free Adaptive Predictive Control

The SISO nonlinear system in this paper is as follows:

$$y(k+1) = f\big(y(k), \cdots y(k-n_y), x(k), \cdots, x(k-n_y)\big) \tag{16}$$

For the nonlinear system (16), the following assumptions are given:

Assumption 1. *In the system (1) equation for a system with a bounded desired output signal $y*(k+1)$, there exists a bounded feasible control input signal, under the action of which the system output is equal to the desired output. This assumption is the most basic requirement for all subjects, and it is an inherent property in itself.*

Assumption 2. *System (16) is generalized Lipschitz, satisfying that for any k and $\Delta u(k)$, there is $|\Delta y(k+1)| \leqslant b|\Delta u(k)|$, where b is a constant, $k \geqslant 0$.*

This assumption is a limit on the output of the system, and a large class of controlled systems conforms to this assumption.

Assumption 3. *f(...) is continuous with respect to the partial derivative of the current control input signal $u(k)$ of the system. This assumption is a typical constraint on the controlled object. Based on the above three assumptions, it can be concluded that:*

Theorem 1 ([28])**.** *For the nonlinear system (16) that satisfies the above three assumptions, there must be a time-varying parameter $\phi_c(k)$, which is called the pseudo-partial derivative PPD, such that the following equation holds:*

$$\Delta y(k+1) = \phi_c(k)\Delta x(k) \tag{17}$$

Based on the above incremental form of the data model, the one-step forward output prediction equation for the control system can be given

$$y(k+1) = y(k) + \phi_c(k)\Delta x(k) \tag{18}$$

Based on the above equation, the N-step forward prediction equation can be further given as follows:

$$\begin{cases} y(k+1) \ = y(k) + \phi_c(k)\Delta x(k) \\ y(k+2) \ = y(k+1) + \phi_c(k+1)\Delta x(k+1) \\ \ = y(k) + \phi_c(k)\Delta x(k) + \phi_c(k+1)\Delta x(k+1) \\ \ \vdots \\ y(k+N) = y(k+N-1) + \phi_c(k+N-1)\Delta x(k+N-1) \\ \ = y(k+N-2) + \phi_c(k+N-2)\Delta x(k+N-2) \\ \ +\phi_c(k+N-1)\Delta x(k+N-1) \\ \ \vdots \\ \ = y(k) + \phi_c(k)\Delta x(k) + \cdots \\ \ +\phi_c(k+N-1)\Delta x(k+N-1) \end{cases} \tag{19}$$

For ease of calculation, the N-step prediction of the system output and the N-step prediction of the system input can be expressed as:

$$\Delta X_N(K) = \left[\Delta x(k), \cdots, x(k+N)^T\right], \Delta Y_N(k+1) = [y(k+1), \cdots y(k+N)]^T \tag{20}$$

The previous coefficients are all 1. An N*1-dimensional unit vector can be used to represent its coefficients, i.e., $E(k) = [1, 1, \cdots, 1]^T$.

The coefficients of the system input increments can be expressed as:

$$A(k) = \begin{bmatrix} \phi_c(k) & 0 & 0 & 0 & 0 & 0 \\ \phi_c(k) & \phi_c(k+1) & 0 & 0 & & \\ \vdots & \vdots & \ddots & \vdots & & \vdots \\ \phi_c(k) & \cdots & & \phi_c(k+N_u-1) & & \\ \vdots & & & \vdots & \ddots & 0 \\ \phi_c(k) & \phi_c(k+1) & \cdots & \phi_c(k+N_u-1) & \cdots & \phi_c(k+N-1) \end{bmatrix}_{N\times N} \tag{21}$$

It can be abbreviated as:

$$Y_N(k+1) = E(k)y(k) + A(k)\Delta U_N(k) \tag{22}$$

Among them, N_u is the control time domain constant,

$$A_1(k) = \begin{bmatrix} \phi_c(k) & 0 & 0 & 0 \\ \phi_c(k) & \phi_c(k+1) & 0 & 0 \\ \vdots & \vdots & \ddots & \vdots \\ \phi_c(k) & \phi_c(k+1) & \cdots & \phi_c(k+N_u-1) \\ \vdots & \vdots & \cdots & \vdots \\ \phi_c(k) & \phi_c(k+1) & \cdots & \phi_c(k+N_u-1) \end{bmatrix}_{N\times N_u}$$

$$\Delta X_{N_u}(k) = [\Delta x(k), \cdots, \Delta x(k+N_u-)]^T$$

Consider the following control input criterion function:

$$J = \sum_{i=1}^{N} \left(y(k+i) - y^*(k+i)^2 \right) + \lambda \sum_{j=0}^{N_u-1} \Delta u^2(k+j) \tag{23}$$

where λ is a weighting parameter, which is adjusted to ensure smoother system inputs and increase the stability of the control system.

Make:

$$Y_N^*(k+1) = [y^*(k+1), \cdots, y^*(k+N)]^T \tag{24}$$

Then:

$$J = \left[Y^*{}_N(k+1) - Y_N(k+1)^T \right] [Y^*{}_N(k+1) - Y_N(k+1)] + \lambda \Delta X_{N_u}^T(k) \Delta X_{N_u}(k) \tag{25}$$

Apply optimization conditions $\frac{\partial J}{\partial U_{N_u}(k)} = 0$, the following control law can be obtained: The control input at moment K is:

$$x(k) = x(k-1) + g^T \Delta X_{Nu}(k) \tag{26}$$

$$\hat{\phi}_c(k) = \hat{\phi}_c(k-1) + \frac{\eta \Delta x(k-1)}{\mu + \Delta x(k-1)^2} \left(\Delta y(k) - \hat{\phi}_c(k-1) \Delta x(k-1) \right) \tag{27}$$

where $0 < \eta \leqslant 1$ is the step size factor, and the purpose of introducing the weight factor μ is to prevent the meaninglessness of the denominator of the above equation being zero, hence the name penalty factor.

Considering that $\phi_c(k+1), \cdots, \phi_c(k+N_u-1)$ in $A_1(K)$ cannot be directly calculated from the I/O data at moment k, $\phi_c(k+1), \cdots, \phi_c(k+N_u-1)$ needs to be predicted using a recursive prediction algorithm [48] based on the existing sequence of estimated values $\phi_c(1), \ldots, \phi_c(k)$.

Let a series of estimates of the PDD be obtained using Algorithm (27) at moment k, establishing the auto-regressive equation of PPD:

$$\hat{\phi}_c(k+1) = \theta_1(k)\hat{\phi}_c(k) + \cdots + \theta_n(k)\hat{\phi}_c\left(k - n_p + 1\right) \tag{28}$$

where $\theta_i, i = 1, \cdots, n_p.n_p$ is the appropriate order, according to the literature [49], its value is usually taken as from 2 to 7.

The prediction algorithm of PPD can be obtained as:

$$\hat{\phi}_c(k+j) = \theta_1(k)\hat{\phi}_c(k+j-1) + \cdots + \theta_n(k)\hat{\phi}_c\left(k+j-n_p\right) \tag{29}$$

where $j = 1, \cdots, N_u - 1$.

Definition $\theta(k) = [\theta_1, \cdots, \theta_n(k)]^T$ can be determined by the following equation:

$$\theta(k) = \theta(k-1) + \frac{\hat{\varphi}(k-1)}{\delta + \|\hat{\varphi}(k-1)\|^2}\left[\hat{\phi}_c(k) - \hat{\varphi}^T(k-1)\theta(k-1)\right] \tag{30}$$

where $\hat{\varphi}(k-1) = [\hat{\varphi}(k-1), \cdots, \hat{\varphi}(k-n)]^T$, δ is a positive number, and can be taken as $\delta \in (0, 1]$.

3.2. Improved Model-Free Adaptive Predictive Control (IMFAPC)

Let this be the expected output of the system at time k, and the error between the expected output and the actual output at time k. Then, we have:

$$\begin{cases} e(k+1) = y^*(k+1) - y(k+1) \\ e(k) = y^*(k) - y(k) \end{cases} \tag{31}$$

Substituting $\Delta y(k+1) = \phi_c(k)\Delta u(k)$ into the above equation:

$$\begin{aligned} e(k+1) - e(k) &= y^*(k+1) - y(k+1) - (y^*(k) - y(k)) \\ &= y^*(k+1) - y^*(k) - (y(k+1) - y(k)) \\ &= \Delta y^*(k+1) - \phi_c^T(k)\Delta x(k) \end{aligned} \tag{32}$$

Make $\theta(k+1) = \sum_{i=1}^{k} Te(i)$ the sum of the errors up to moment k, then:

$$\begin{cases} \theta(k+1) = \sum_{i=1}^{k} Te(i) \\ \theta(k+1) = \theta(k) + Te(k) \end{cases} \tag{33}$$

Combining the two equations above, we have:

$$\begin{bmatrix} \theta(k+1) \\ e(k+1) \end{bmatrix} = \begin{bmatrix} 1 & T \\ 0 & 1 \end{bmatrix} \begin{bmatrix} \theta(k) \\ e(k) \end{bmatrix} + \begin{bmatrix} 0 \\ -\phi_c^T(k) \end{bmatrix} \Delta x(k) + \begin{bmatrix} 0 \\ 1 \end{bmatrix} \Delta y^*(k+1) \tag{34}$$

Make $v(k) = [\theta(k), e(k)]^T$, T the sample time. The equation can be reduced to the following form:

$$v(k+1) = Av(k) + B(k)\Delta x(k) + C\Delta y^*(k+1) \tag{35}$$

where A, B, C represent the following:

$$A = \begin{bmatrix} 1 & T \\ 0 & 1 \end{bmatrix}, B = \begin{bmatrix} 0 \\ -\phi_c^T(k) \end{bmatrix}, C = \begin{bmatrix} 0 \\ 1 \end{bmatrix}$$

Equation (35) constitutes the core of this algorithm, called the PI module, where the error $k(e)$ is the proportional part, the error before the moment k and $\theta(k)$ is equivalent to the integral part, so it is called the PI module. Compared to the previous Model-Free Adaptive Predictive Control, the error sum was added, which makes the control algorithm more accurate, preventing the error from becoming greater and neutralizing the previous error in the form of a sum, which improves the control effect of the delayed system.

From the Equation (35), we have:

$$\begin{cases} v(k+1|k) = Av(k) + B(k)\Delta x(k) + C\Delta y^*(k+1) \\ v(k+2|k) = Av(k+1) + B(k+1)\Delta x(k+1) + C\Delta y^*(k+2) \\ \qquad\qquad = A^2 v(k) + AB(k)\Delta x(k) + C\Delta y^*(k+2) \\ \qquad\qquad \vdots \\ v(k+N_u|k) = A^{N_u} v(k) + \cdots + C\Delta y^*(k+1) \end{cases} \tag{36}$$

Make:

$$\begin{cases} V(k) = [v(k+1|k), \cdots, v(k+N_u|k)] \\ \Delta Y^*(k) = [\Delta y^*(k+1), \cdots, \Delta y^*(k+N_u)]^T \\ \Delta X(k) = [\Delta x(k), \cdots, \Delta x(k+N_u-1)]^T \end{cases}$$

Then:

$$V(k) = Gv(k) + F(k)\Delta X(k) + H\Delta Y^*(k) \tag{37}$$

where G, F, H represent the following:

$$G = \left[A, A^2, \cdots, A^{N_u}\right]^T$$

$$F = \begin{bmatrix} B(k) & 0 & \cdots & 0 \\ AB(k) & B(k+1) & \cdots & 0 \\ \vdots & \vdots & \ddots & \vdots \\ A^pB(k) & A^{p-1}B(k+1) & \cdots & B(k+p) \end{bmatrix}$$

$$H = \begin{bmatrix} C & 0 & \cdots & 0 \\ AC & C & \cdots & 0 \\ \vdots & \vdots & \ddots & \vdots \\ A^pC & A^{p-1} & \cdots & C \end{bmatrix}$$

where $P = N_u - 1$. Consider the following input criterion function:

$$J = \frac{1}{2}V^T(k)v(k) + \frac{1}{2}\lambda\Delta x^2(k) \tag{38}$$

Let its derivative with respect to $\Delta X(k)$ equal to zero gives:

$$\Delta X(k) = -\left(F^T(k) + \lambda I\right)^{-1} F^T(K)(Gv(t) + H\Delta Y^*(k)) \tag{39}$$

Thus, the control law function is

$$x(k) = x(k-1) + g^T\Delta X(k) \tag{40}$$

where $g = [1, 0, \cdots, 0]^T_{N_{U*1}}$. So far, the control law function of the Model-Free Adaptive PI Prediction algorithm is derived.

3.3. Controller Design and Operation Mechanism

3.3.1. Design of an Improved Model-Free Adaptive Predictive Controller

Combining Equations (27), (29), (30), (39) and (40) the Improved Model-Free Adaptive Predictive Controller (IMFAPC) design scheme is as follows:

$$\begin{cases} \hat{\phi}_c(k) = \hat{\phi}_c(k-1) + \frac{\eta\Delta x(k-1)}{\mu+\Delta x(k-1)^2}\left(\Delta y(k) - \hat{\phi}_c(k-1)\Delta x(k-1)\right) \\ \hat{\phi}_c(k+j) = \theta_1(k)\hat{\phi}_c(k+j-1) + \cdots + \theta_n(k)\hat{\phi}_c\left(k+j-n_p\right) \\ \theta(k) = \theta(k-1) + \frac{\hat{\varphi}(k-1)}{\delta+\|\hat{\varphi}(k-1)\|^2}\left[\hat{\phi}_c(k) - \hat{\varphi}^T(k-1)\theta(k-1)\right] \\ \Delta X(k) = -\left(F^T(k) + \lambda I\right)^{-1} F^T(K)(Gv(t) + H\Delta Y^*(k)) \\ x(k) = x(k-1) + g^T\Delta X(k) \end{cases} \tag{41}$$

The control scheme of IMFAPC is given in Formula (41), and the structure diagram of the control system is shown in Figure 4. Compared with the previous Model-Free Adaptive Prediction Control (MFAPC) algorithm, its prediction is more accurate, taking the error sum and error as the main part of the control law function, which makes the control input produce more accurate constraints and avoids too many inputs. Coupled with the

prediction of future error values, it provides better control for time-delay systems such as the pH neutralization process and has important practical significance.

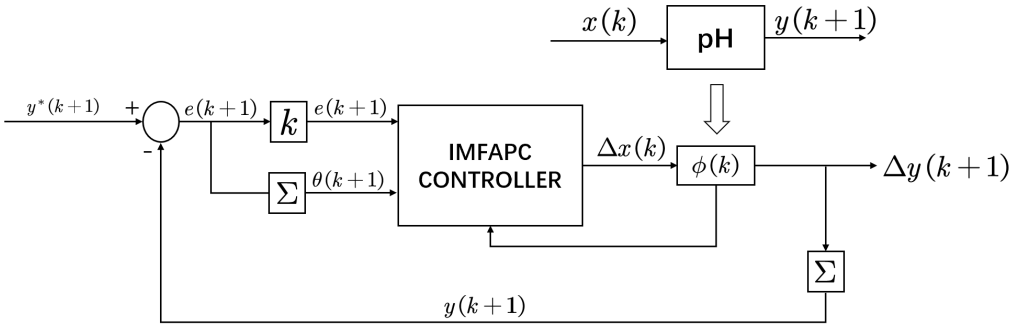

Figure 4. Control system structure diagram.

3.3.2. Controller Operation Mechanism

The implementation steps of the Improved Model-Free Adaptive Predictive Controller steps are as follows:

Step 1: Initialize the parameters, set the initial values for the values before the moment of pseudo-partial derivative k, and set the appropriate values for each parameter used λ, η, μ, etc.

Step 2: At the current moment k, substitute the obtained historical input and output data $x(k-1)$, $y(k)$ into the Equation (27) and find the value of the pseudo partial derivative $\hat{\phi}(k)$ at moment k.

Step 3: Using the values of $\hat{\phi}(k)$ found in step 2 and their historical values, substitute them into Equation (28) to find the vector of time-varying coefficients $\theta(k)$ at moment k.

Step 4: Substitute the values of $\hat{\phi}(k)$ found in steps 2 and 3 and the vector of timely coefficients $\theta(k)$ into Equation (29) to find the predicted value of $\hat{\phi}_c(k+1)$ at the next moment, repeat steps 2 and 3 until the predicted value of $\hat{\phi}_c(k+n_p-1)$ is found, in preparation for the control input.

Step 5: Substituting the series of PPD predictions $\hat{\phi}_c(k+1)$, $\hat{\phi}_c(k+2), \cdots, \hat{\phi}_c(k+n_p-1)$ obtained in step IV into Equations (39) and (40), we can find the control input value $x(k)$ at the current moment.

Step 6: Apply the control input value $x(k)$ derived in step 5 to the controlled system to obtain the actual output value $y(k+1)$.

Step 7: Substitute the latest obtained system input and output values $x(k), y(k+1)$ into step 2. The data will be iterated to achieve the Improved Model-Free Adaptive Predictive Control of the controlled system by repeating steps 3 to 6.

Some of the pseudocode (Algorithm 1) is as follows:

Algorithm 1: The output solution of IMFAPC algorithms

Input: The output value of the model
Output: The output value of the controller
1 initialization $\phi(1), \theta(1), \lambda, \eta, \mu, \delta, e > 0$;
2 Calculate the estimate value of $\phi_c(k)$
3 **if** $(\phi(k) < 10^{-5})||(|\Delta x(k)| < 10^{-5})$ **then**
4 let $\phi(k) = \phi(1)$
5 **else**
6 $\hat{\phi}_c(k) = \hat{\phi}_c(k-1) + \frac{\eta \Delta x(k-1)}{\mu + \Delta x(k-1)^2}\left(\Delta y(k) - \hat{\phi}_c(k-1)\Delta x(k-1)\right)$
7 **end**
8 Calculate the value of $\theta(k)$
9 **if** $\theta(k) \geqslant 10$ **then**
10 let $\theta(k) = \theta(1)$
11 **else**
12 $\theta(k) = \theta(k-1) + \frac{\hat{\varphi}(k-1)}{\delta + \|\hat{\varphi}(k-1)\|^2}\left[\hat{\phi}_c(k) - \hat{\varphi}^T(k-1)\theta(k-1)\right]$
13 **end**
14 min J, output the $\Delta x(k)$;
15 Output $x(k)$, $x(k) = x(k-1) + g * \Delta x(k)$;
16 return to step 2

4. Simulation Analysis and Research

In this paper, the MFAC, MFAPC, and IMFAPC algorithms are selected to control the pH neutralization system, and the control effects in different cases are compared. The parameters of the controlled system are selected as follows (Table 1):

Table 1. The initial values for this model.

The Concentration of Acid	The Concentration of Alkali	Volume of the Container	Flow Rate of Acid	Sample Time	Inertia Time
0.004 mol/L	0.001 mol/L	20 L	1 min	0.25 L/min	40 min

The evaluation of the control effectiveness of the system is based on the following indicators

$$\begin{cases} ISE_i = \int_{t0}^{tf} {e_i}^2 dt \\ IAE_i = \int_{t0}^{tf} |e_i| dt \\ \mathrm{Dev_i}^{\max} = \max|\mathrm{e_i}| \end{cases}$$

4.1. Compared with MFAC, MFAPC

A white noise with a variance of 0.1 was applied to the system and the Improved Model-Free Adaptive Predictive Control(IMFAPC) algorithm was compared with Model-Free Adaptive Control (MFAC) and Model-Free Adaptive Predictive Control (MFAPC). The control performance indexes of the step response system are shown in Table 1. The pH control target in industrial processes is often between 6 and 8, in order to better demonstrate the control effect of the controller, we also conducted simulation experiments when the set values were 5 and 10, from both Figures 5 and 6 and Table 2, we can see that no matter what range the set value changes in, the control performance of IMFAPC is much better than the other two algorithms. When the pH setting value changes step by step, the time for the system to reach the steady state is shorter, and IMFAPC can quickly track the change of the setting value, and the three performance indexes are also much better than the other two algorithms, and it can suppress the external disturbance well and its robustness is better. Its robustness is better.

Table 2. Comparison of the dynamic performance of step response system with three control algorithms.

	ISE	*IAE*	*MaxDev*
MFAC	0.160	0.301	1.954
MFAPC	0.114	0.246	1.698
IMFAPC	0.071	0.192	1.013

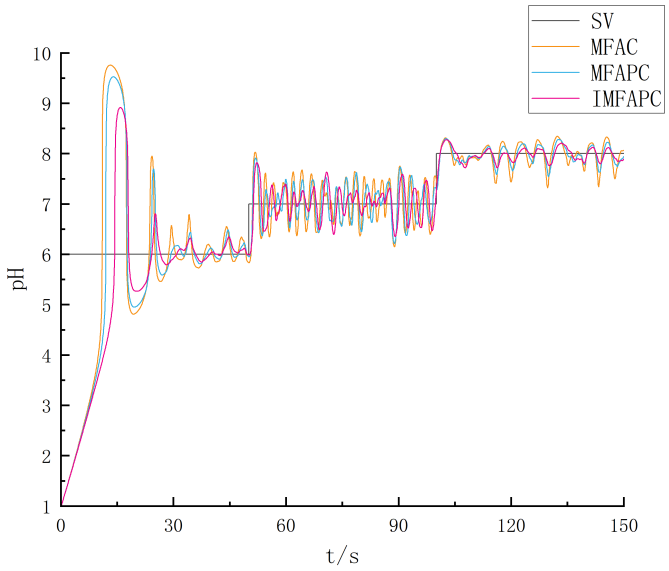

Figure 5. The setting value is between 6 and 8.

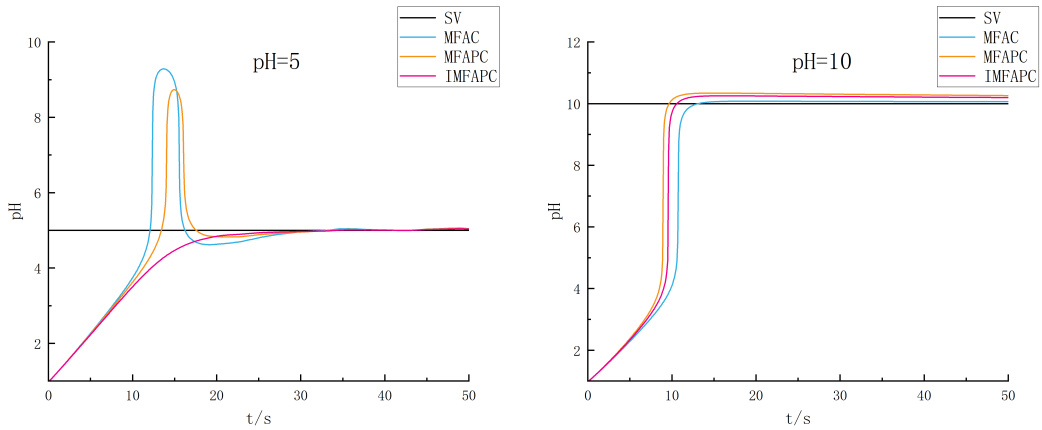

Figure 6. The setting value is 5 and 10.

4.2. Different Time Lag Steps

As shown in Figure 7, when the number of lag steps increases, the corresponding oscillation curve is slightly affected and the Model-Free Adaptive Control method can overcome the time lag quoted and reach the steady state more quickly. This is an aspect of its superiority over conventional PID control.

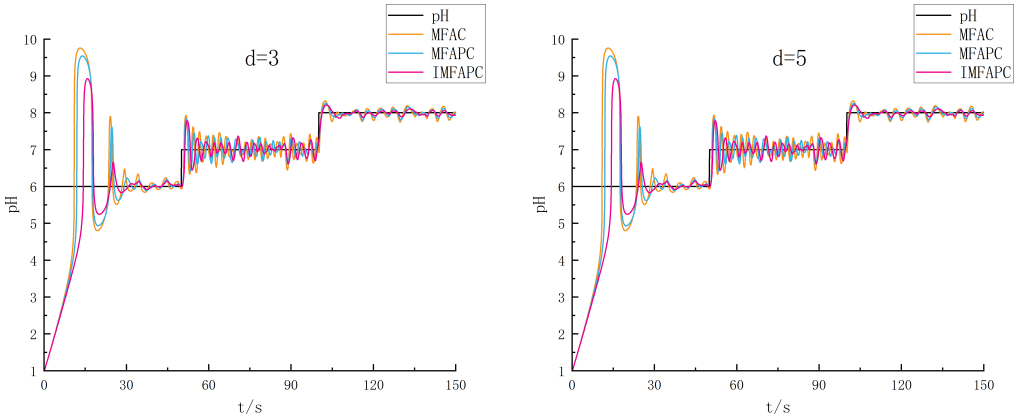

Figure 7. When the lag steps are 3 and 5, respectively.

4.3. Different ω_k

To simulate the disturbance variables present in the actual production operation, the system white noise with variances of 0.05 and 0.5 is added to the system, i.e., ω_k = 0.05 and ω_k = 0.5, and we can see from Figure 8, that the overshoot of all three algorithms increases when the disturbance variables of the system increase. Whereas the overshoot and maximum deviation of IMFAPC are lower than those of MFAC and MFAPC, especially when the setting value is at 8, the superiority of IMFAPC is better reflected. The comparison of the system's dynamic performance is shown in the following table Tables 3 and 4.

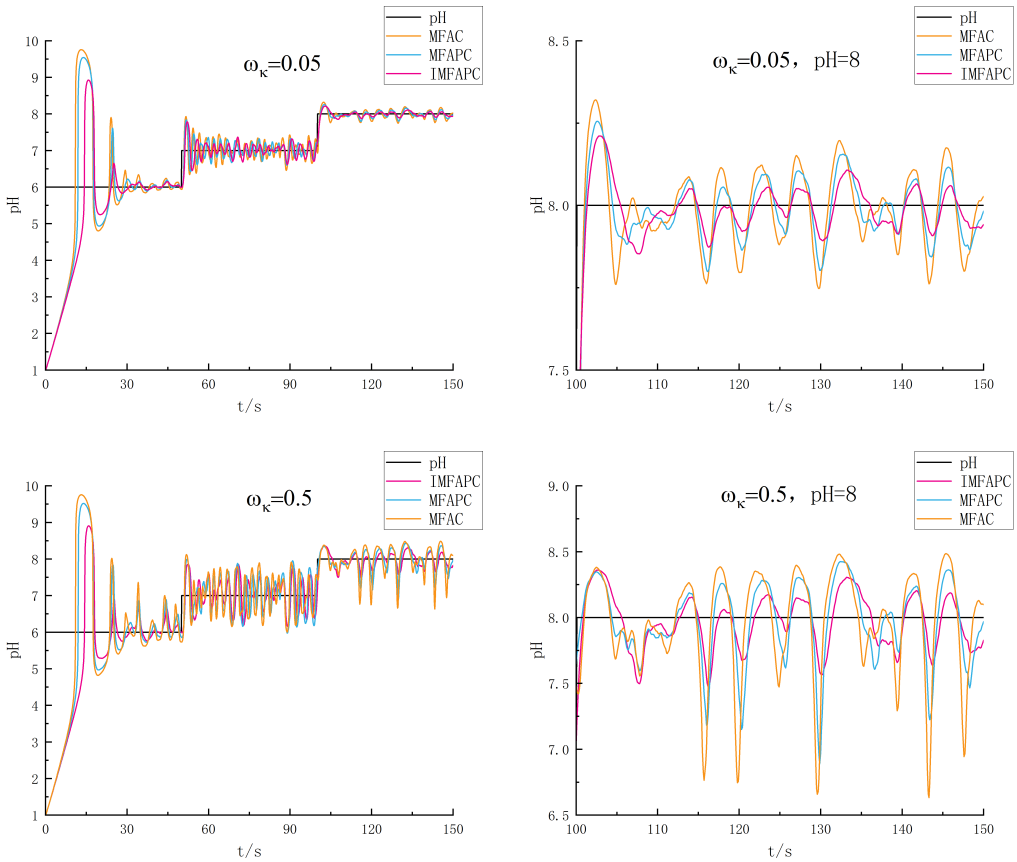

Figure 8. System response when the T_P = 40 min, d = 1, $\phi(0)$ = 2, ω_k is 0.05 and 0.5.

Table 3. Comparison of system dynamic performance at ω_k = 0.05.

	ISE	*IAE*	*MaxDev*
MFAC	0.096	0.196	1.904
MFAPC	0.068	0.159	1.608
IMFAPC	0.042	0.127	1.009

Table 4. Comparison of system dynamic performance at ω_k = 0.5.

	ISE	*IAE*	*MaxDev*
MFAC	0.260	0.340	2.022
MFAPC	0.203	0.350	1.848
IMFAPC	0.120	0.265	1.019

4.4. Different T_P

From the simulation results, as shown in Figure 9, it can be seen that when the inertia time increases, the overshoot of the system also increases, but all of them can reach the steady state around 30 s. It can be seen from the figure that the overshoot of IMFPAC is much smaller than that of MFAC and MFAPC, especially when the pH setting value is 7. This confirms that IMFAPC can better overcome the effect of larger inertia and reflects the superiority of IMFAPC over MFAC and MFAPC. The results of the dynamic performance comparison of the step response system are shown in the Tables 5 and 6.

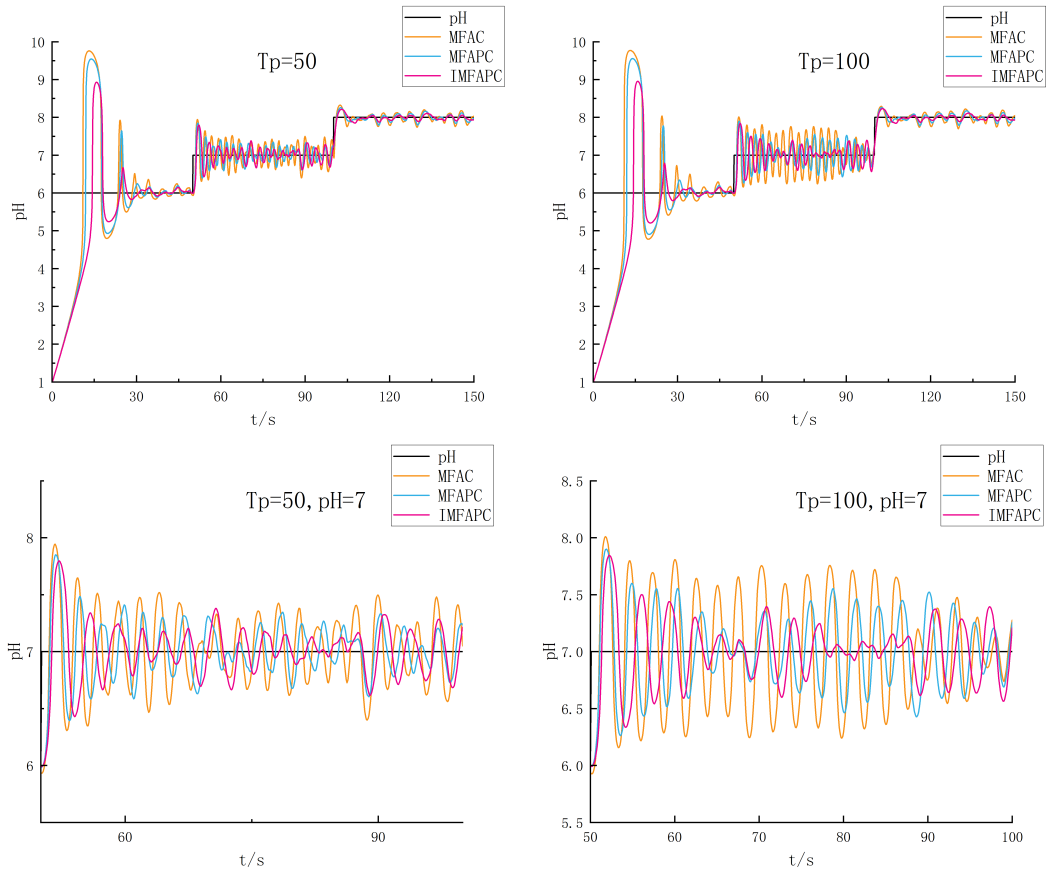

Figure 9. System response when the inertia time of the system (time constant), T_P is 50, 100 min, $\phi(0)$ = 2, d = 1.

Table 5. Comparison of system dynamic performance at $T_P = 50$.

	ISE	*IAE*	*MaxDev*
MFAC	0.109	0.219	1.925
MFAPC	0.072	0.165	1.646
IMFAPC	0.044	0.131	1.009

Table 6. Comparison of system dynamic performance at $T_P = 100$.

	ISE	*IAE*	*MaxDev*
MFAC	0.174	0.293	2.035
MFAPC	0.102	0.207	1.778
IMFAPC	0.057	0.151	1.009

4.5. Different λ

λ is an important parameter in the control system, and its proper selection can ensure the stability of the controlled system and obtain better output performance. Figure 10 shows the control effect of the IMFAPC algorithm for different λ at $\phi(0) = 2$ and $\omega_k = 0.05$. From the figure, it can be seen that when λ is small, the control system response is faster but the overshoot is also larger, and when λ is larger, the overshoot is smaller but the control system dynamic response is also slower, and vice versa. Large λ leads to slow dynamic response and poor control accuracy, while the stability of the system is greatly affected when λ is too small, so the value of λ largely determines the effect of the controller.

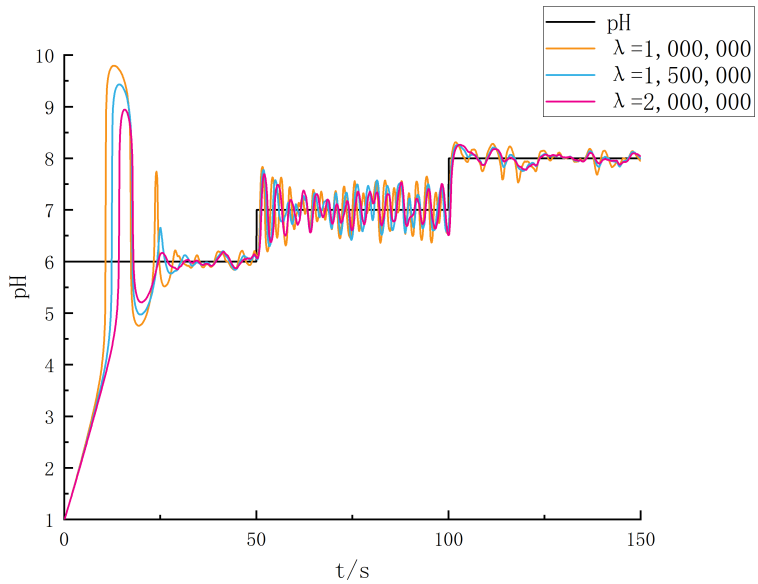

Figure 10. The control effect of IMFAPC under different λ.

4.6. Different ϕ

In IMFAPC, the initial value of the pseudo-partial derivative $\phi(0)$ also has a great influence on the dynamic response of the system, and this paper has conducted a lot of simulation experiments for its initial value selection. The experimental results are shown in Figure 11, from which it can be seen that as ϕ increases, the system response is faster, but its stability decreases and the system goes out of control after exceeding a certain range. Moreover, it can be seen that when $\phi(0) = 2$, the stability of the system is better, the tracking error is small, and the resistance to interference is strong. Once the initial value is determined, the pseudo-partial derivative ϕ is simply derived online from the controlled system I/O data.

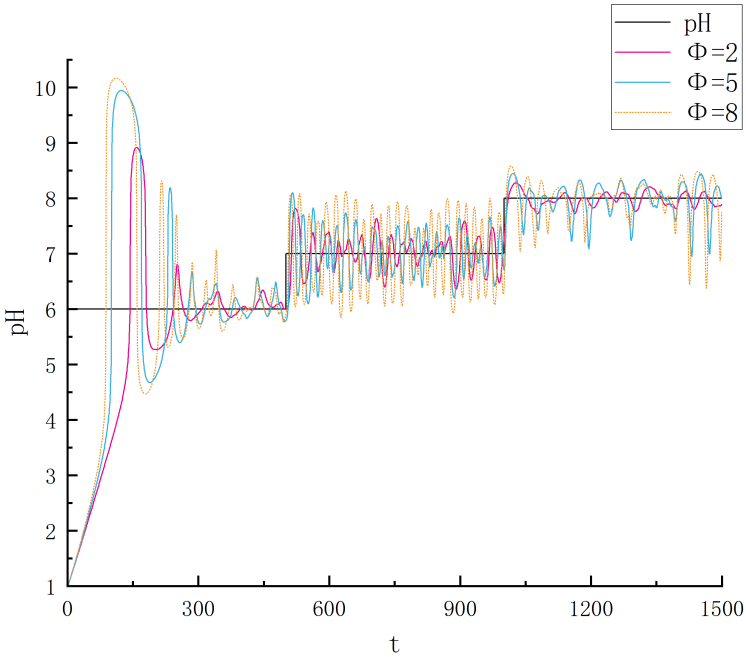

Figure 11. The rest of the conditions are the same as the simulations of IMFAPC with different ϕ.

5. Conclusions

Aiming at the strong nonlinearity and large time-delay characteristics of the WWTP pH neutralization system, a Model-Free Adaptive Predictive Control PI algorithm is proposed and applied to the control of the pH neutralization process. Compared with the traditional PID control algorithm, the model-free adaptive strategy can give the control system a faster response time and avoid complex parameter adjustment work.

By introducing error and error sum as PI module and combining the advantages of the generalized predictive algorithm, an improved model-free adaptive PI predictive control algorithm is realized. Due to the use of error and error sum, and the introduction of input and output prediction, the calculated input value is more accurate, and the designed controller is ideal.

The control algorithm module is constructed and programmed by using the SIMULINK toolbox in MATLAB. By changing the controller parameters and adding different white noise signals to the system, the control algorithm is compared with the MFAC algorithm and the MFAPC algorithm. The simulation results show that compared with MFAPC, IMFAPC can further improve the overshoot caused by pH neutralization and strong nonlinear and large time-delay systems, and the robustness is better.

Although the Improved Model-Free Adaptive Predictive Control algorithm has a good effect on pH control, there are still many shortcomings in this work:

(1) The selection of controller parameters has a great impact on the control effect, and the current method of obtaining parameters is only to debug multiple times empirically in simulation experiments.
(2) In predictive control, the setting size of the control time domain constant N_u and the order N_p of the time-varying parameter coefficient is discussed, it's about whether the prediction results are accurate enough.
(3) So far, we have only studied pH neutralization process, in the future work, we will also select other processes in the wastewater treatment process,such as coagulation process and biochemical process as control objects, to verify the applicability of the algorithm.

Author Contributions: Conceptualization, J.L. and Z.T.; methodology, H.L.; software, Z.W.; validation, B.X.; formal analysis and investigation, Z.L.; resources, W.H.; data curation, B.X.; writing—original draft preparation, Z.L.; project administration, W.H.; funding acquisition, W.H. All authors have read and agreed to the published version of the manuscript.

Funding: This research was funded by Research on Intelligent Management and Control Technology for Typical Refinery and Chemical Wastewater Treatment Plants Grant,Grant Number, 2022DJ6904, Research and development of data transmission equipment for automatic pollution source monitoring system, Grant Number, RISE2023KY03.

Data Availability Statement: The data that support the findings of this study are available from the corresponding author upon reasonable request.

Conflicts of Interest: The authors declare no conflict of interest. The authors had no role in the design of the study; in the collection, analysis, or interpretation of data; in the writing of the manuscript; or in the decision to publish the results.

References

1. Younes, Y.A.; Kospa, D.A.; Salama, R.S.; Ahmed, A.I.; Ibrahim, A.A. Hydrophilic candle wastes microcapsules as a thermal energy storage material for all-day steam and electricity cogeneration. *Desalination* **2023**, *550*, 116377. [CrossRef]
2. Zhang, S.; Zhou, P.; Xie, Y.; Chai, T. Improved model-free adaptive predictive control method for direct data-driven control of a wastewater treatment process with high performance. *J. Process. Control* **2022**, *110*, 11–23. [CrossRef]
3. Ghimire, A.; Frunzo, L.; Pirozzi, F.; Trably, E.; Escudie, R.; Lens, P.; Esposito, G. A review on dark fermentative biohydrogen production from organic biomass: Process parameters and use of by-products. *Appl. Energy* **2015**, *144*, 73–95. [CrossRef]
4. Harris, D.C. Quantitative Chemical Analysis. *Br. Med. J.* **2010**, *2*, 908–909.
5. Idili, A.; Porchetta, A.; Amodio, A.; Vallée-Bélisle, A.; Ricci, F. Controlling Hybridization Chain Reactions with pH. *Nano Lett.* **2015**, *15*, 5539–5544. [CrossRef]
6. Tomaszewski, M.; Cema, G.; Ziembinska-Buczynska, A. Significance of pH control in anammox process performance at low temperature. *Chemosphere* **2017**, *185*, 439. [CrossRef]
7. Wang, Z.; Ho, D.; Liu, X. A note on the robust stability of uncertain stochastic fuzzy systems with time-delays. *IEEE Trans. Syst. Man Cybern.-Part A Syst. Hum.* **2004**, *34*, 570–576. [CrossRef]
8. Rose, T.P.; Devadhas, G.G. Detection of pH neutralization technique in multiple tanks using ANFIS controller. *Microprocess. Microsyst.* **2020**, *72*, 102845.1–102845.11. [CrossRef]
9. Srinivasan, K.; Harikrishnan, V.; Venkatesh, R.; Gowtham, S. Smart Monitoring and Auto-Neutralization of pH of Alkaline Liquids in Process Industries. In Proceedings of the International Conference on Smart Sensors and Application, Kuching, Malaysia, 24–26 July 2018.
10. Akshay, N.; Subbulekshmi, D. Online Auto Selection of Tuning Methods and Auto Tuning PI Controller in FOPDT Real Time Process-pH Neutralization. *Energy Procedia* **2017**, *117*, 1109–1116. [CrossRef]
11. Lim, Y.; Park, Y.; Lee, J. The control of pH neutralization process in the large scale reactor. In Proceedings of the 2015 15th International Conference on Control, Automation and Systems (ICCAS), Busan, Republic of Korea, 13–16 October 2015.
12. Hermansson, A.W.; Syafiie, S. Please ensure that there are no duplicated references. Model predictive control of pH neutralization processes: A review. *Control Eng. Pract.* **2015**, *45*, 98–109. [CrossRef]
13. Henson, M.A.; Seborg, D.E. Adaptive nonlinear control of a pH neutralization process. *IEEE Trans. Control Syst. Technol.* **2002**, *2*, 169–182. [CrossRef]
14. Jutan, A.; Baeyens, E.; Gómez, J. Wiener model identification and predictive control of a pH neutralisation process. *IEEE Proc.-Control Theory Appl.* **2004**, *151*, 329–338.
15. Nie, J.H.; Loh, A.P.; Hang, C.C. Fuzzy modeling of nonlinear pH processes through neural approach. In Proceedings of the 1994 IEEE 3rd International Fuzzy Systems Conference, Orlando, FL, USA, 26–29 June 1994.
16. Kulkarni, B.D.; Tambe, S.S.; Shukla, N.V.; Deshpande, P.B. Nonlinear pH control. *Chem. Eng. Sci.* **1991**, 46, 995–1003. [CrossRef]
17. Alama.; WI.; Tabacchi.; IA. Wiener Predictive Control for a pH neutralization plant. In Proceedings of the 2017 CHILEAN Conference on Electrical, Electronics Engineering, Information and Communication Technologies (CHILECON), Pucon, Chile, 18–20 October 2017.
18. Tan, W.W.; Lu, F.; Loh, A.P.; Tan, K.C. Modeling and control of a pilot pH plant using genetic algorithm. *Eng. Appl. Artif. Intell.* **2005**, *18*, 485–494. [CrossRef]
19. Rahman, M.A. Nonlinear model predictive control of a Hammerstein Weiner model based experimental managed pressure drilling setup. *ISA Trans.* **2019**, *88*, 225–232.
20. Mwembeshi, M.M.; Kent, C.A.; Salhi, S. A genetic algorithm based approach to intelligent modelling and control of pH in reactors. *Comput. Chem. Eng.* **2004**, *28*, 1743–1757. [CrossRef]
21. Akay, B.; Ertunç, S.; Bursali, N.; Alpbaz, H.H.M. Application of generalized predictive control to baker's yeast production. *Chem. Eng. Commun.* **2003**, *190*, 999–1017. [CrossRef]

22. Karacan, S.; Hapoğlu, H.; Alpbaz, M. Generalized predictive control to a packed distillation column for regulatory problems. *Comput. Chem. Eng.* **1998**, *22*, S629–S632. [CrossRef]
23. Zhang, W.; Imaeda, M.; Wood, R.K.; Hashimoto, K. Design of an Auto-Tuning PID Controller by a Generalized Predictive Control Method. *J. Chem. Eng. Jpn.* **2005**, *38*, 147–153. [CrossRef]
24. Holaza, J.; Klaucio, M.; Drgona, J.; Oravec, J.; Kvasnica, M.; Fikar, M. MPC-based reference governor control of a continuous stirred-tank reactor. *Comput. Chem. Eng.* **2017**, *108*, 289–299. [CrossRef]
25. Kuo, Y.L.; Citra Resmi, I.E. Model Predictive Control Based on a Takagi–Sugeno Fuzzy Model for Nonlinear Systems. *Int. J. Fuzzy Syst.* **2019** , *21*, 556–570. [CrossRef]
26. Sha'abani, Y.A.; Tahir, F.; Masding, P.; Mack, J.; Lennox, B. Control Improvement using MPC: A Case Study of pH Control for Brine Dechlorination. *IEEE Access* **2018**, *6*, 13418–13428. [CrossRef]
27. Wu, H.; Yan, F.; Wang, G.; Lv, C. A predictive control based on decentralized fuzzy inference for a pH neutralization process. *J. Process. Control* **2022**, *110*, 76–83. [CrossRef]
28. Hou, Z. *Model Free Adaptive Control: Theory and Applications*; CRC Press: Boca Raton, FL, USA, 2013.
29. Hou, Z.; Chi, R.; Gao, H. An Overview of Dynamic-Linearization-Based Data-Driven Control and Applications. *IEEE Trans. Ind. Electron.* **2017**, *62*, 4076–4090. [CrossRef]
30. Hou, Z.; Jin, S. A Novel Data-Driven Control Approach for a Class of Discrete-Time Nonlinear Systems. *IEEE Trans. Control Syst. Technol.* **2011**, *19*, 1549–1558. [CrossRef]
31. Hou, Z.; Jin, S. Data-Driven Model-Free Adaptive Control for a Class of MIMO Nonlinear Discrete-Time Systems. *IEEE Trans. Neural Netw.* **2011**, *22*, 2173.
32. Tan, K.K.; Lee, T.H.; Huang, S.N.; Leu, F.M. Adaptive-Predictive Control of a Class of SISO Nonlinear Systems. *Dyn. Control* **2001**, *11*, 151–174. [CrossRef]
33. Wang, Y.; Qiu, X.; Zhang, H.; Xie, X. Data-Driven-Based Event-Triggered Control for Nonlinear CPSs Against Jamming Attacks. *IEEE Trans. Neural Netw. Learn. Syst.* **2021**, *33*, 3171–3177. [CrossRef]
34. Ma, Y.S.; Che, W.W.; Deng, C.; Wu, Z.G. Model-Free Adaptive Resilient Control for Nonlinear CPSs with Aperiodic Jamming Attacks. *IEEE Trans. Cybern.* **2022**, 1–8. Available online: https://ieeexplore.ieee.org/abstract/document/9954193 (accessed on 3 April 2023). [CrossRef]
35. Bu, X.; Yu, W.; Yu, Q.; Hou, Z.; Yang, J. Event-Triggered Model-Free Adaptive Iterative Learning Control for a Class of Nonlinear Systems Over Fading Channels. *IEEE Trans. Cybern.* **2021**, *52*, 9597–9608. [CrossRef]
36. Xu, W. Model-free adaptive command-filtered-backstepping sliding mode control for discrete-time high-order nonlinear systems. *Inf. Sci. Int. J.* **2019**, *485*,141–153. [CrossRef]
37. Ma, Y.S.; Che, W.W.; Deng, C. Dynamic event-triggered model-free adaptive control for nonlinear CPSs under aperiodic DoS attacks. *Inf. Sci.* **2022**, *589*, 790–801. [CrossRef]
38. Zhang, B. Prescribed performance based model-free adaptive sliding mode constrained control for a class of nonlinear systems. *Inf. Sci. Int. J.* **2021**, *544*, 97–116. [CrossRef]
39. Xu, D.; Shi, Y.; Ji, Z. Model-Free Adaptive Discrete-Time Integral Sliding-Mode-Constrained-Control for Autonomous 4WMV Parking Systems. *IEEE Trans. Ind. Electron.* **2017**, *65*, 834–843. [CrossRef]
40. Tutsoy, O.; Barkana, D.E.; Tugal, H. Design of a completely model free adaptive control in the presence of parametric, non-parametric uncertainties and random control signal delay. *ISA Trans.* **2018**, *76*, 67–77. [CrossRef]
41. Pham, H.A.; Sffker, D. Modified Model-Free Adaptive Control Method Applied to Vibration Control of an Elastic Crane. In Proceedings of the ASME 2019 International Design Engineering Technical Conferences and Computers and Information in Engineering Conference, Anaheim, CA, USA, 18–21 August 2019.
42. Madadi, E.; Yao, D.; Sffker, D. Model-Free Control Approach of a Three-Tank System Using an Adaptive-Based Control. In Proceedings of the ASME IDETC/CIE 2017, Cleveland, OH, USA, 6–9 August 2017.
43. Zhu, Y.; Hou, Z. Data-Driven MFAC for a Class of Discrete-Time Nonlinear Systems with RBFNN. *IEEE Trans. Neural Netw. Learn. Syst.* **2014**, *25*, 1013–1020. [CrossRef]
44. Guo, Y.; Hou, Z.; Liu, S.; Jin, S. Data-Driven Model-Free Adaptive Predictive Control for a Class of MIMO Nonlinear Discrete-Time Systems with Stability Analysis. *IEEE Access* **2019**, *7*, 102852–102866. [CrossRef]
45. Hou, Z.; Liu, S.; Tian, T. Lazy-Learning-Based Data-Driven Model-Free Adaptive Predictive Control for a Class of Discrete-Time Nonlinear Systems. *IEEE Trans. Neural Netw. Learn. Syst.* **2016**, *28*, 1914–1928. [CrossRef]
46. Xu, D.; Jiang, B.; Shi, P. A Novel Model-Free Adaptive Control Design for Multivariable Industrial Processes. *IEEE Trans. Ind. Electron.* **2014**, *61*, 6391–6398. [CrossRef]
47. Mcav, T.J.; Hsu, E.; Lowenthal, S. Dynamics of pH in Controlled Stirred Tank Reactor. *Ind. Eng. Chem. Process. Des. Dev.* **1972**, *11*, 68–70. [CrossRef]
48. Han, Z. On the Identification of Time-Varying Parameters in Dynamic Systems. *Acta Autom. Sin.* **1984**, *10*, 330–337.
49. Han, Z. *Multilevel Iterative Methods and Their Applications*; Science Press: Beijing, China, 1989.